DRICO silfe 150/270 FU 62.3

BETRIEBSANLEITUNG / OPERATING INSTRUCTIONS

DRICO® slife

ASO Safety Solutions

Übergabedokumentation / Documentation

Anlagenbeschreibung / Description

Anlagenart / Type of plant

Hersteller / Manufacturer

Seriennummer / Serial number

Datum der Inbetriebnahme / Commissioning date

Aufstellort / Site of installation

Verwendete Steuerung / Control unit

Zusatzkomponenten / Additional components

Funktionsprüfung / Functional test

Sicherheitssensoren reagieren auf Betätigung / Safety sensors response to actuation ok

Sicherheitssensoren reagieren auf Zuleitungsunterbrechung /
Safety sensors response to supply line intteruption ok

Name der ausführenden Firma / Installing company

Name des Installateurs / Installer

Datum / Date

Unterschrift / Signature

DRICO® slife

Table of Content

List of Figures

1 General notes

This document is a description for the use of the electronic gate control unit

DRICO slife 150 FU62.3
DRICO slife 270 FU62.3

in software version 2.49.49.58 or newer. In the further description, the control unit is generally referred to as „DS FU62“ if not specified more precisely.
This operating manual covers the installation, operation, maintenance, repair, decommissioning and disposal of the control system. It is specifically intended for the technical installer and service technician of this control system.
All previous editions of this document become invalid with this edition for the current hardware and software of the control. The information in this document may be changed without prior notice.
The control unit may only be commissioned by recognized trained electricians who are familiar with the safety standards of electrical drive and automation technology. Detailed knowledge of the control unit and the gate driven by it is mandatory. Therefore, read this manual carefully.

The safety instructions must be observed!

1.1 Symbol explanation

Caution! The following safety instructions must be observed to avoid personal injury.

Attention! The following safety instructions must be observed to avoid damage to property.

Information! Here follows further information or a reference to other documentations.

1.2 Overview of changes

The following table describes the changes made to this document, the date of change, and the reason for each change.

Revision	Datum	Description, reason for change
01	6. Mrz. 2019	First edition of this document for DS FU62.3 (RSC)
02	8. Okt. 2019	Revision of the document (RSC)
03	3. Sep. 2020	Revision of the document {Chapter 6.11.4} (RSC)
04	16. Nov. 2020	Revision {Chap. 4.2 / 6.18} (RSC)
05	17. Nov. 2020	Revision "external brake chopper" (RSC)
06	08.06.2021	Revision layout & update (AGL)

1.3 Terminology, definitions and abbreviations

AC ..... Alternating Current

BMZ ..... Fire Alarm Panel

CRC16 ..... 16 Bit Cyclic Redundancy Check

DC ..... Direct Current

DIN ..... German Institute for Standardization

EEPROM ..... Electrical Eraseable Programmable Read Only Memory

EMV ..... Electromagnetic compatibility

EN ..... European Standard

FI ..... Residual current circuit breaker

FU ..... Frequency converter

GND ..... Ground potential

IP ..... Protection against foreign bodies and water (Intrusion Protection)

ISK ..... Inductive cable transmission system from ASO, which replaces the trailing cable for transmitting the transmission of the moving safety contact edges

ISO ..... International Organisation for Standardization

LCD ..... Liquid Crystal Display (LCD)

RAM ..... Temporary data memory (Random Access Memory)

ROM ..... Read only memory

RTC ..... Real Time Clock

SKL ..... Safety contact strips

VCC ..... Positive operating voltage (Voltage of common collector)

2 General safety regulations and protective measures

STOP

- Before commissioning the door control unit, read these instructions carefully.
- The installation and commissioning of the control unit may only be carried out by qualified personnel who are familiar with its operating instructions and the applicable regulations for occupational safety and accident prevention. The instructions in the manual must be observed and complied with.
- These instructions must always be available at the place of use of the control unit / gate. It must be read thoroughly and applied by every person who is entrusted with the operation, maintenance and servicing of the control unit.
- The operators of the gate system or their deputies must be instructed in its operation after commissioning the system.
- Electrical work may only be carried out by qualified electricians.
- Safety regulations of the electrical engineering and the professional associations must be observed.
- It is essential to disconnect the drive system from the power supply before carrying out any wiring work. It must be ensured that the power supply remains disconnected during the cabling work.
- The manufacturer and user of the system/machine on which the control unit is used are responsible for coordinating and complying with all applicable safety regulations and rules on their own responsibility.
- To ensure function and safety, the instructions in this manual must be observed. Failure to observe the warnings may result in bodily injury and damage to property. The manufacturer is not liable for damage caused by failure to observe the instructions.
- The control unit does not contain any components that require maintenance by the user. Any unauthorized modifications or repairs to the control system will void the manufacturer's warranty and liability.
- All existing emergency command devices must be checked before the system is put into operation.
- All gate pulse generators and control devices must be mounted within sight of the gate and at a safe distance from the moving parts of the gate. A minimum mounting height of 1.5 meters must be maintained.
- It must be ensured that children cannot play with the gate control system.
- Possible crushing and shearing points on the gate system must be observed and secured if necessary.
- Before moving the gate, it must be ensured that no persons or objects are in the danger area of the gate.
- Never reach into a running gate or into moving parts.
- The control unit guarantees functional safety, but not the safety of the entire system. Therefore, before using the control unit, a safety assessment of the entire system in accordance with DIN EN 13241-1 „Gates - Product standard“ is necessary.
- To ensure that the safety system is designed in accordance with the standard DIN EN 12453 „Safety in use of power-operated doors and gates“, the system must be tested for correct functioning by experts at suitable intervals. The test must be documented in a manner that can be traced at any time.

The DRICO slife FU door control unit is a frequency converter. After switching off, dangerous voltages may still be present due to charged capacitors. Therefore, a waiting time of 5 minutes must be maintained for discharging the capacitors. There is a danger to life and fire when working on the control under voltage!
If the control unit is protected by a residual current circuit breaker, only all-current sensitive type B RCD switches may be used.

3 Function and connections

The DRICO slife is an electronic control unit with safety functionality. It is used as a control unit for operating electrically driven doors and gates in industrial environments. It contains a frequency converter and electronics for stepless control of a three-phase motor with up to 0.75 kW or 2.1 kW on a single-phase power supply. It offers the possibility of soft starting and soft braking of the gate. The maximum frequency output by the inverter is limited to 75 Hz.

3.1 Requirements

The control unit is only fully functional in the ready-to-use door system. Additional external components may be required for this purpose, such as:

- Drive (electronic motor and gearbox)
- Command input devices (switches/buttons/loop detectors)
- Signal devices (flashing lights/horns/status indicators)
- Sensor elements (safety contact edges/ Light barrier)

These are not included in the scope of delivery of the controller.

3.2 Technical features

The DS FU62 gate control unit has the following features:

- Auto configuration and extensive presets for standard gate systems
- Controllable output voltage and frequency for the connected three-phase motor
- Extensive parameterization system
- 2 inputs for the hold to run operating buttons OPEN ‚gate open' and CLOSE ‚gate close'
- 2 inputs for switching elements in the two end positions OPEN and CLOSE
- One input for the stop function
- 3 inputs for command devices in automatic mode optionally for: OPEN, CLOSE, TOGGLE change-over pulse (OPEN, STOP, CLOSE, STOP, ...), partial OPEN, emergency STOP and emergency function
- 3 output relays (normally open) for flashing light, gate position OPEN and position CLOSED
- 2 output relays (changeover contacts) for: Motor brake, maintenance request, error indication or traffic light control
- Inputs for the evaluation of the stationary and moving safety contact edges
- Separate input for a lightbarrier, light grid or the like
- Position determination of the gate by limit switch and reference run
- Real-time clock for time-accurate error / event analysis and for calendar-controlled gate functions
- Temperature sensors on the power and control electronics
- Operation and configuration via rotary and selection switch
- LC display for diagnosis display and extensive parameterization by means of menu navigation
- Optional, attachable radio receiver for radio hand-held transmitter for remote control of the gate

3.3 General view of the control unit

In the drawn general view of the control unit, clear reference is made to its relevant parts, which are also referred to in the text of this operating manual.

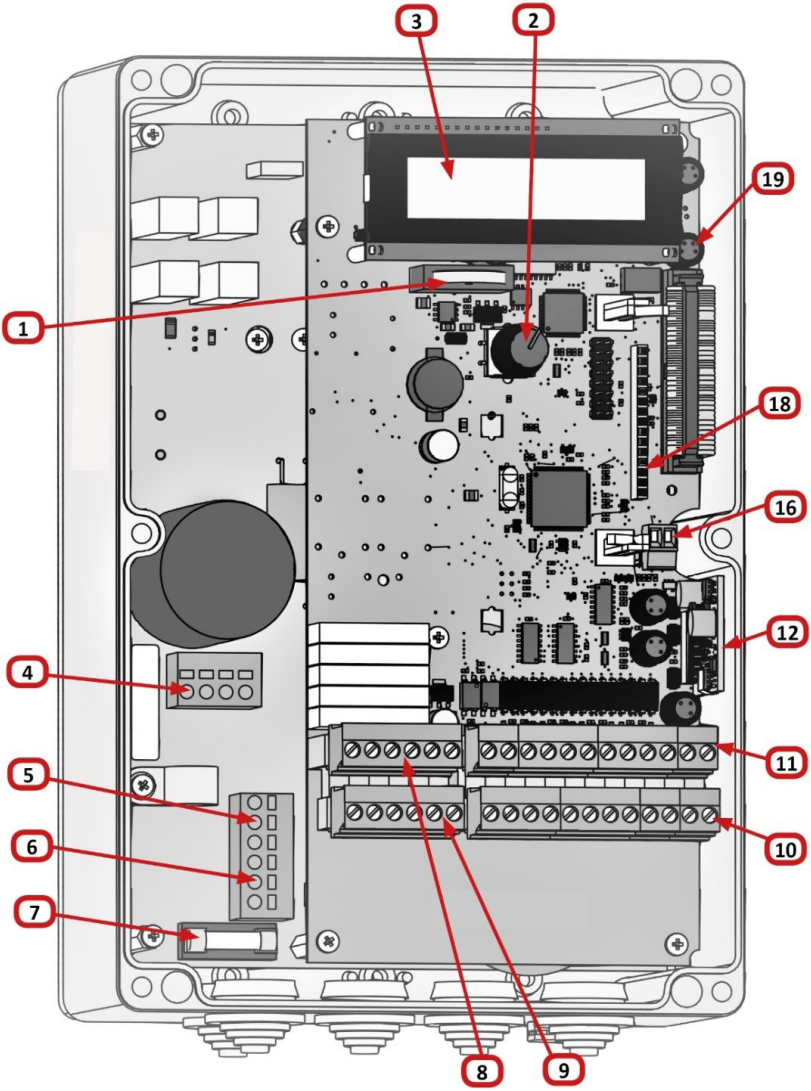

Fig. 1 General view of the control unit

Designations of the image numbers:

1	Battery for the clock module
2	Rotary and push button switch for display selection and settings
3	LC text display
4	Motor connection
5	Mains voltage supply 230 V ***AC*** / 50 Hz
6	Connection for additional external 230 V ***AC*** / 50 Hz consumers (output)
7	Backup fuse (6.3 A) for the external consumers at terminal 6
8	Connections for relay outputs Rel4 and Rel5
9	Connections for the relay outputs Rel1 to Rel3
10	Connections for the power supply of the external 24 V DC devices and control elements as well as for the stationary safety contact edges
11	Connections for the inputs of the command transmitters, light barrier and the ISK / ELMON inductive coil core
12	Electrical evaluation unit for the moving safety contact edges: ELMON inductive onboard 70-757 board
16	Antenna socket of the receiver of the radio remote control (optional)
18	Plug-in location for radio receiver module (optional)
19	Incremental encoder connection

3.4 Operating modes: function and operation

The software of the control unit is divided into individual function modules and presents itself to the user in three possible operating modes (Hold to run, automatic operation and emergency operation):

Fig. 2 Operation modes overview

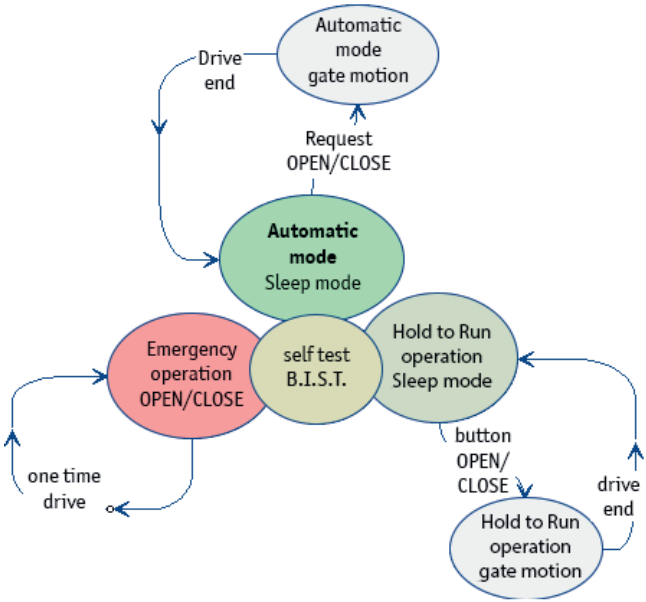

3.4.1 Hold to run operation

The gate control can be used with limited comfort in hold to run operation. In hold to run operation, the gate can only be moved using the OPEN and CLOSE buttons specially connected to inputs ‚In8' and ‚In7'. The gate does not require safety contact edges for this operation. It only moves as long as an OPEN or CLOSE button is held down. Hold to run operation is only permissible if the operator has a full view of the door system and can operate it without endangering himself or other persons.

A STOP button is also provided in the hold to run operating mode in addition to the OPEN and CLOSE buttons. If this button is not to be connected, the corresponding input must be connected to +24 V by a wire bridge.
The control unit also switches automatically from automatic mode to hold to run mode if the safety devices on the gate no longer permit automatic mode (e.g. defective safety edge / light barrier). In this case, the operator must also keep the command button (OPEN at [In8] or CLOSE at [In7]) continuously pressed.
The gate movement is only initiated after a delay of 2 seconds. This serves to protect against incorrect operation and informs the user of the temporary transition from automatic mode to dead man's mode.

3.4.2 Automatic operation

When the safety is fully set up, the control is normally operated in the mode „activation with automatic self-retaining". Only in automatic mode all comfort functions of the control are available to the user. Here, the full safety of the gate is guaranteed with activated safety devices. In this operating mode, the gate travels at its maximum set speed. In automatic mode, gate travel can be initiated by:

- w to run switch / key switch (OPEN or CLOSE)
- Impulse command encoder (OPEN, PartialOPEN or CLOSE)
- Impulse button with TOGGLE function (OPEN, STOP, CLOSE, STOP)
- Commands via radio remote control
- Commands via built-in clock and parameterized calendar

Each travel command leads to the execution of the complete, selected action (open gate, close gate, passage of persons, etc.). Each action is immediately cancelled by a stop command or a signal from the safety devices.

Activation of a safety contact edge during a gate movement leads to immediate reversing of the gate. Interrupting the lightbarrier during the closing process also leads to an immediate stop and automatic opening of the gate.

A drive command in the opposite direction to the drive currently being executed gently brakes the door and then allows it to move in the opposite direction.

Automatic operation in case of incomplete setup:

If the gate has not yet been completely set up or the reference drive of the control unit has not yet been completed, the control unit runs in a special safety mode (example: the end positions of the gate have not yet been defined and/or not both have been detected during the reference drive).

The gate then only travels at a slower speed. Only after the measurement process with slow speed the gate switches to automatic speed.

Even if the control unit was electrically unpowered, the gate only travels at slow speed for the first time until one of the end positions has been reached. After that, the gate switches to full automatic speed. This behavior prevents the gate from accidentally moving too quickly into the end positions (for example, after mechanical declutching of the motor).

3.4.3 Emergency operation

The door control unit can automatically switch from automatic mode to emergency mode. This automatic change can only be made by an input signal „Emergency function“, which is set from a fire alarm panel. In this operating mode, only the one requested operation (OPEN or CLOSED, depending on the parameterization) is performed at slow speed. During this operation, the safety devices are activated. The operation can be interrupted by pressing and holding the STOP key or by the response of a safety device. After this interruption stops, the gate continues to move immediately. At the end of the emergency travel, after resetting the signal („Emergency function“), the software of the control unit performs a restart in order to safely switch back to automatic mode.

A static OPEN or PARTIAL OPEN signal is ignored by the control in this operating mode.

At program start (e.g. switch-on process of the control), a statically applied input signal „Emergency“ is not executed in order to avoid accidents due to accidentally wrong connected inputs.

3.4.4 Change of the operating modes

In the event of failure of electronic safety devices on the gate (e.g. defective safety edge or light barrier), the control unit can automatically switch from automatic mode to Hold to Run Mode. This automatic changeover only takes place for the one motor movement that has been started and only when the buttons for dead man operation (In8 or In7) are pressed. Afterwards, the control system resumes automatic operation, but can switch back to dead man operation during the next movement if the fault reoccurs or persists.

A change between the operating modes is possible in the following directions:

- Automatic operation → Hold to Run Mode
- Hold to Run Mode → Automatic operation (when security is re-established)
- Automatic operation → Emergency operation
- Emergency operation → Automatic mode (after software reset, when the emergency signal is no longer active)

3.5 Accessories

The DS FU62 door control unit can be operated with one or more of the following components:

Safety contact edges

Safety contact edges with an 8.2 kOhm terminal resistor can be connected directly to the control unit for both the open and closed directions via the terminal clamps (Fig. 1 No. 10).

ISK system

The controller already contains the control and analysis logic for the ISK inductive safety system for monitoring the moving safety contact edges (8.2 kOhm).For this purpose, the ELMON inductive onboard 70-757 circuit card (Fig. 1 No. 12) is plugged control unit. The fixed SPK55 coil core can then be connected directly via a terminal (Fig. 1 No. 11).

Light barrier

Through-beam or Light barrier can be connected to a separate input (Fig. 1 No. 11).

Radio receiver

The control unit can optionally be equipped with a receiver for radio hand-held transmitters to operate the gate remotely (Fig. 1 No. 18). An externally mounted antenna can then be connected to this receiver via a separate terminal (Fig. 1 No. 16).

4 Control system installation

This chapter deals with the preparatory commissioning of the DS FU62, both the mechanical assembly and the electrical installation.

4.1 Control unit mounting

Attention!

- Before assembly, the control unit must be checked for any transport or other damage.
- Touching the electronic parts, especially the parts of the processor circuit, must be avoided. Electronic components can be damaged or destroyed by electrostatic discharges.
- During the installation of the control unit, the system must be disconnected from the power supply.
- During installation of the control unit, make sure that no moisture (e.g. rain) gets into the control unit.
- The control unit must be mounted free of mechanical tension.
- Unused cable entries must be replaced by sealing plugs to ensure the enclosure's degree of protection.
- The cables must not be subjected to any mechanical tensile load.
- If the control unit is mounted on a conductive base, the base itself must be connected to PE with an adequate ground connection. The heat sink of the control unit itself does not provide such a ground connection.

The control unit is mounted using four cylinder head screws with a diameter of 4 mm. The control is designed for vertical mounting.

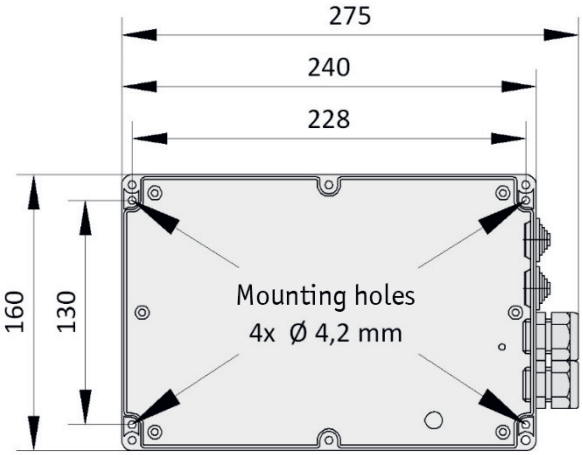

Fig. 3 Mechanical dimensions of the housing

Notice:
The heat sink of the controller heats up during operation. It is therefore important to ensure sufficient thermal coupling of the heat sink. A form-fit connection of the heat sink to a heat dissipating metal surface is ideal. It is not permissible to mount the controller on a flammable base (e.g. wood).

In the case of non-heat dissipating surfaces, the control unit must be mounted at a distance using distance bolts. An air space of at least 10 cm must be provided above and below the control unit for convection. Insufficient heat dissipation can affect the function of the control unit.

During continuous operation, the heat sink can become warm up to 65 °C. At higher temperatures, the frequency converter switches off.

4.2 Electrical connection of the power electronics

Caution!
For safety reasons, the electrical installation must always be carried out by an authorized electrician.

Work on the control unit is only permitted when all poles of the power supply are disconnected. A supply disconnecting switch or the use of a plug is to be provided for the all-pole disconnection. The supply disconnecting switch or the network plug must be easily accessible.

The points listed under the section Safety instructions (Chapter: 2) must be observed.

The parallel routing of signal and power lines should be avoided as far as possible.
It can lead to interference of the signals!

All cables should be measured according to their power consumption.

The cable entries used in the housing must be treated in such a way that after the cables have passed through, the protection against entry of water and foreign bodies still corresponds to the specified IP class.

Damaged cable entries must be replaced immediately with undamaged ones.

4.2.1 Power supply

The power electronics of the DRICO slife are designed for a single-phase input voltage of 230 V AC 50 Hz. The supply voltage is connected to the terminals labeled „L“, „N“ and „PE“ on the lower power board (Fig. 1 and Fig. 4 No. 5).

From this, it then uses a rectifier to generate the regulated 5 V DC, 7 V DC and the 24 V DC for the external connection elements that are still required.
Furthermore, the power electronics generate a three-phase rotating field of variable voltage and frequency for the drive motor.

DRICO slife **150** DRICO slife **270**

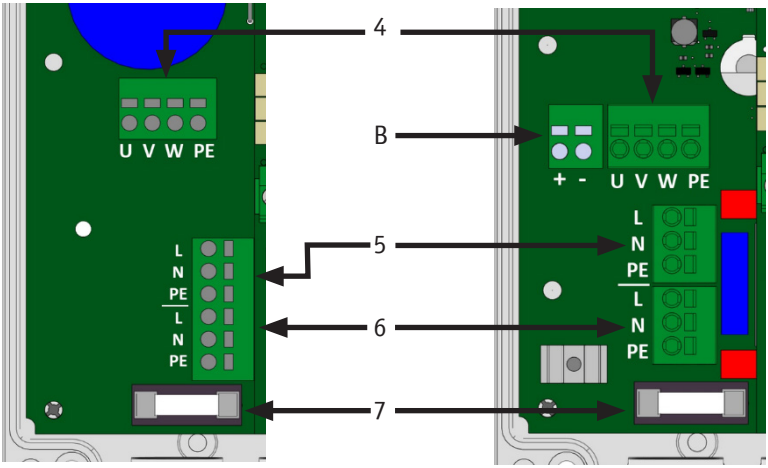

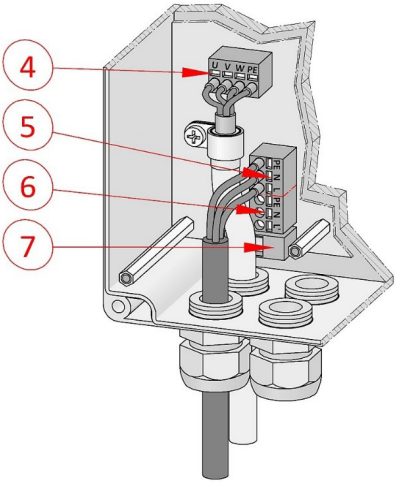

4	Connection three-phase motor	7	Backup fuse for external consumers (6,3A latching)
5	Power supply 230 V	B	External brake chopper on DC link
6	External 230 V consumers		

Fig. 4 Power supply and motor connection

4.2.2 Motor connection

The output voltage for the three-phase motor of the gate operator is generated by the control unit with pulse width modulation from the supply voltage of the power electronics.
For this purpose, the motor is connected to the „U“, „V“, „W“ and „PE“ terminals (Fig. 4 No. 4). When connecting the motor itself, the connection diagrams of the motor manufacturer must be observed.
It is essential to ensure the correct connection of the **protective conductors** and the **grounding** of the motor connection cable.
Preferably, the motor should be connected in **delta operation** to obtain an effective mechanical torque.
When commissioning the gate system, the direction of rotation of the motor must be taken into account so that when the OPEN button is pressed, the gate also moves in the desired direction. If necessary, the motor connections „V“ and „W“ must be exchanged or the direction of motor rotation must be adjusted by software via the configuration in the service menu.

4.2.3 Connection of an external brake chopper on the DS 270

In the DS 150 controller, four brake chopper resistors are already integrated on the circuit board of the power module.
The DS 270, on the other hand, offers the possibility of connecting an external brake chopper module to the frequency inverter‘s DC link, which is charged with 400 volts ***DC***. In the case of extremely heavy gates that are braked very quickly, it may be possible for the motor to generate a regenerative DC link voltage overshoot due to a mechanical pushing torque. If such operating conditions result from your application, please contact the manufacturer for clarification of the application conditions.

4.2.4 Notes on appropriate EMC installation

Attention!
If the installation is not appropriate for EMC, other devices in the vicinity of the control unit may be affected.

The DRICO slife FU is a frequency inverter control. Frequency converters are devices that can generate electromagnetic interference in their environment due to their circuit technology.

Therefore, only a **grounded cable** may be used as the motor cable. The shield must be connected to the motor by means of an EMC gland and to the PE clamp inside the control unit.

To meet the requirements of EN 61000-6-3, the power supply cable and all control cables must be damped with ferrite cores.

4.2.5 Supply of external consumers with 230 V *AC*

External consumers of the control unit, which operate with 230 V ***AC*** power supply, can be connected via the fused voltage output with the terminal designation „L‘“on the power board of the control unit (Fig. 4 No. 6). The maximum load, specified by the integrated overvoltage fuse (Fig. 4 No. 7), must be observed.

4.3 Wiring of the inputs and outputs

There are two side-by-side terminal blocks on the controller for connecting external devices. The left block is intended for relay outputs (Fig. 1 Nos. 8 and 9), while command devices and sensors can be connected to the right block (Fig. 1 Nos. 10 and 11). The clamp number is printed on the board underneath the clamps.

For better identification, these clamps are shown further detailed in the following figure.

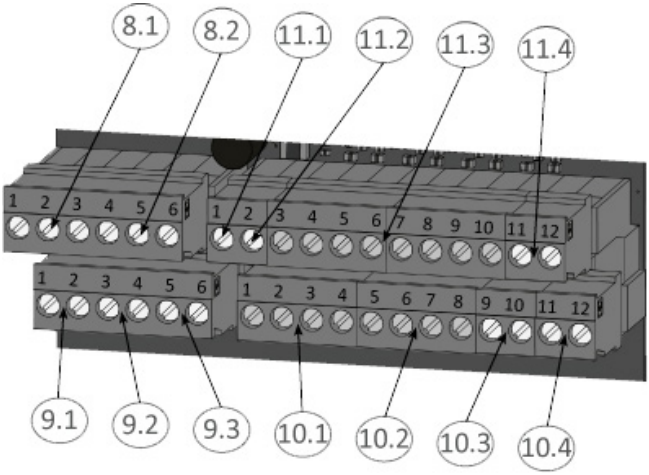

Fig. 5 Connection of external devices

4.3.1 Supply of external devices with 24 V *DC*

For the supply of the external devices, command devices and sensors, a potential-separated 24 V ***DC*** supply is available on the control unit, which can supply a maximum of 500 mA current. This supply voltage is protected on the printed circuit board by an automatically resetting fuse.
The 24 volts are available on the lower terminal bar at the left terminal points no. 1 to 4 with the label „+24 V".
On the right side there is the corresponding ground potential at the terminal points No. 5 to 8 with the label „0 V".

Fig. 5	Clamp No.	Label	Description / Function
10.1	1 to 4	+24 V	+24 Volt DC power supply
10.2	5 to 8	0 V	Ground clamps for the external 24 V consumers

4.3.2 Command device and limit switches

The inputs for the control unit's command generators are labeled „In1" to „In8" on the upper terminal bar and are preassigned with the following functions:

Fig. 5	Clamp No.	Label	Input function
11.3	3	In8	HoldToRun OPEN (e.g. key switch at the gate)
11.3	4	In7	HoldToRun button CLOSED (e.g. key switch at the gate)
11.3	5	In6	STOP button (normally closed contact)
11.3	6	In5	UP Impulse
11.3	7	In4	CLOSE Impulse
11.3	8	In3	TOGGLE Switching pulse (OPEN / STOP / CLOSE / STOP)
11.3	9	In2	Limit switch OPEN Position of the gate (NC contact)
11.3	10	In1	Limit switch CLOSE Position of the gate (NC contact)

The three input functions from In3 to In5 highlighted in red in the table represent the default setting. They can also be configured with other functions, as described in section 6.11.

For the open, close and toggle (TOGGLE) functions [In3 to In5] are connected as command transmitters (push buttons) with normally open contact.

For the STOP function [In6], only command transmitters with a normally closed contact are used. Several NC contacts can be connected in series in the form of a stop chain.

The end switches at In2 and In1 for the OPEN and CLOSED positions of the gate are also NC contacts.

Attention!
In order to meet the special requirements for Hold to Run Operation, the fixed inputs In7 and In8 may only be assigned to push buttons whose operation always guarantees a complete view of the door system and safe use. In automatic mode, they also act as pulse inputs, but can be used in the event of defective safety systems to briefly revert to dead man mode in the event of prolonged actuation.

The connection of the command buttons and sensors to the inputs in a typical configuration (here with a partial OPEN function instead of CLOSE at In4) is shown in the following drawing:

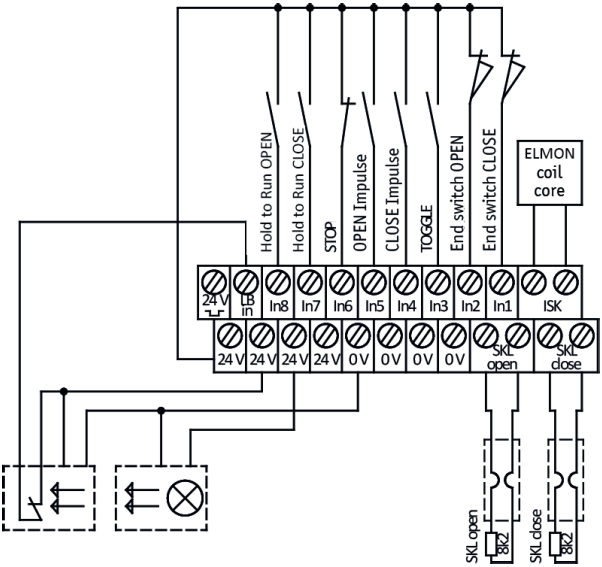

Fig. 6 Example installation with end switches, light barrier and safety contact edges

4.3.3 Stationary Safety Contact Edges

The stationary safety contact edges (8.2 kOhm) for securing the gate can be connected directly with their M8 plug to the sockets labeled „open“ and „close“ on the circuit board.

Alternatively, however, the contact edges can also be connected to the green, plug-in clamps at the bottom right of the input terminal block, according to the following table:

Fig. 5	Clamps No.	Label	Input function
10.3	9, 10	SKL open	Fixed safety contact edge (OPEN direction)
10.4	11, 12	SKL close	Fixed safety contact edge (CLOSE direction)

The analysis of the signals of the contact edges occurs in the software of the control (chapter 6.6).

Attention!
Only the M8 connector or the input clamp may be connected to one and the same input (SKL open; SKL close), but not both at the same time. This otherwise represents a parallel connection of the contact strips and leads to a malfunction.

4.3.4 Travelling safety contact edges on the ELMON inductive system

The safe evaluation of the inductive rope transmission system ISK of the manufacturer ASO GmbH for the safety contact edges (8.2 kOhm) moving along at the gate is already integrated on the control unit if the ELMON inductive 70-757 PCB (Fig. 1 No. 12) is plugged on.

A fixed coil core SPK55 (with M8 connector) can be directly connected to the lowest of the three 3-pole M8 sockets.

Alternatively, the SPK55 fixed coil core can be connected directly to the two right-hand terminals Nos. 11 and 12 on the upper input terminal block with the designation „ISK“. The safety-related evaluation of the signals from the moving safety contact edges then takes place directly in the control system.

Fig. 5	Clamp No.	Label	Input function
11.4	11, 12	ISK	ELMON inductive 70-757 Input (fixed coil core)

In the default setting, the evaluation of a connected ISK system is activated (chapter 6.7).

Attention!
Again, do not connect both the M8 connector and the input terminal at the same time. This will result in a malfunction.

4.3.5 Light barrier

Both one-way light curtains and reflex light curtains, which operate with 24 V ***DC*** operating voltage, can be connected directly to the control unit. The input signal of the light barrier is connected to terminal no. 2 with the designation „LB in“.

Fig. 5	Clamps No.	Label	Input function
11.1	1	24 V ⊓⊔	Test signal output (e.g. for light curtain)
11.2	2	LB in	Input signal from the light barrier

The upper left clamp no. 1 with the label „24 V ⊓⊔“ is a 24 volt supply, which is periodically switched off briefly for test purposes. The sensor of a light barrier, for example, can be connected to this power supply. During the short switch-off phase, the function of the light barrier input signal is then checked.

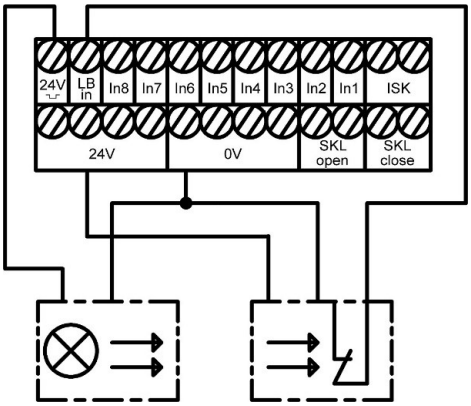

Fig. 7 Connection of tested one-way light curtains

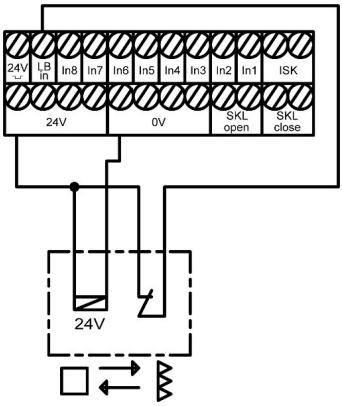

Fig. 8 Connection of reflex light curtain

The two illustrations show an example of the different connection between a one-way light curtain sensor tested by blanking the transmitter and an untested reflex sensor.

In the default setting of the control unit, the evaluation of an untested one-way light curtain is activated (chapter 6.8).

4.4 Relay outputs

For signaling and lighting purposes, the DRICO slife FU60 provides five relays. The switching contacts are voltage-free and can switch resistive loads of max. 250 W.

The relays are preset with the following functions:

Fig. 5	Clamps No.	Label	Output function
9.1	1, 2	Rel1	Flashing light or rotating beacon
9.2	3, 4	Rel2	Gate OPEN status display
9.3	5, 6	Rel3	Gate CLOSED status display
8.1	1, 2, 3	Rel5	not preassigned
8.2	4, 5, 6	Rel4	not preassigned

The output of Rel1 with the function of the warning light is switched on permanently during each gate movement and with the beginning of the pre-warning time. The flashing function itself must be performed by the connected lamp.
Relays Rel2 and Rel3 are preassigned with the two status indicators ‚gate OPEN' and ‚gate CLOSED'.

Relays Rel4 and Rel5 can also each be assigned one of the functions listed in chapter 6.14 by the service technician. For example:

- Lighting (yard light) with switch-off delay after the end of a gate movement
- Maintenance signal (maintenance required)
- Additional electromechanical brake
- Error signaling
- Traffic light control

4.4.1 Relay outputs with 24 V

Indicator lights with 24 Volt ***DC*** supply voltage can be connected as shown in the following drawing:

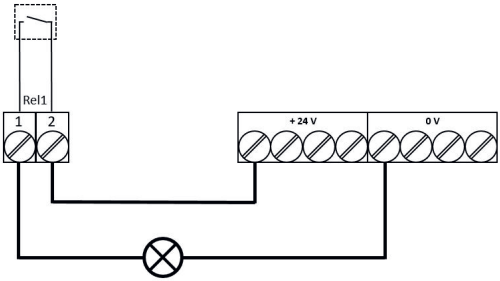

Fig. 9 Connection of relay with 24 V ***DC***

Attention:
When connecting external loads with the 24 volts from the control unit, the maximum current carrying capacity of 500 mA must be observed. In addition, the maximum load of 250 W for each individual relay must be observed.

4.4.2 Relay outputs with 230 V

On the power board of the control unit there is a 230 V ***AC*** output for external consumers (Fig. 4 No. 6), which is protected by a glass tube fuse (6.3 A latching) (Fig. 4 No. 7). 230 V consumers can also be switched via this supply output and via the relays. The connection of a corresponding indicator lamp or flashing lamp can thus be connected as shown in Fig. 9.

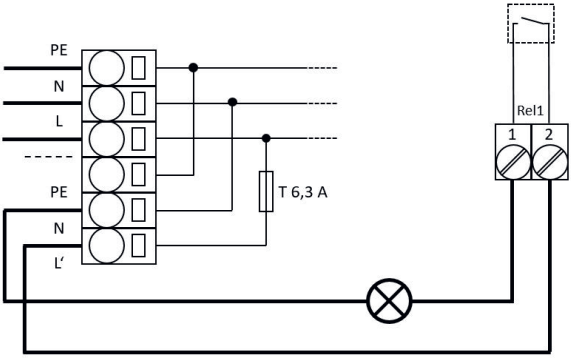

Fig. 10 Connection of relay with 230 V ***AC***

Attention:
When wiring, the maximum current carrying capacity of the supply output must be observed. In addition, the maximum load of 250 W for each individual relay must be observed.

The fuse (6.3 A latching) may only be replaced by a back-up fuse with the same rating.

Caution:
The relay outputs are isolated from the safety extra-low voltage on the control unit in accordance with the standards. However, the individual relay connections among themselves do not meet this condition.
Therefore, mixed operation of the wiring on the relays with 230 V *AC* and 24 V *DC* is not permitted (either connect all relays with 230 V *AC* or all with 24 V *DC*).

4.5 Radio receiver and antenna

Optionally, the control can be equipped with a radio receiver for handheld transmitters for remote control of the gate. Radio receivers of the DRICO slife work either with 433 MHz or with 868 MHz and either with (FM) frequency or with (AM) amplitude modulation. The corresponding radio receiver is plugged into the socket to the right of the slot for the communication interface.

Below the module, an external antenna can be connected to this receiver via the plug-in terminal (Fig. 1 No. 16).

The inner conductor of the coaxial cable from the antenna is connected to the right terminal No.2 (towards the housing side). The grounding of the antenna cable is connected to the left terminal No.1 (towards the center of the board).

Information:
Radio receiver, hand-held transmitter and the decoding routine of the software must match each other, otherwise remote operation of the gate is not possible.
Therefore, only hand-held transmitters approved by the manufacturer can be registered by the control unit.

5 Operation and display

Inputs to the installed software of the controller are made via a modern single-knob control, the rotary and selector switch. Visual feedback from the program to the operator is provided via the liquid crystal display (LCD).

5.1 Rotary / Push Selector Switch

The rotary and selection switch (Fig. 1 No. 2) can be used to influence the displays of the control. The parameterization of the control with the help of the integrated menu system can also be controlled via this rotary and selection switch. This control knob has two functions. By turning it, a displayed value can be changed in its size: increase to the right [clockwise]; decrease to the left [counterclockwise]. Likewise, turning can be used to scroll back and forth in a displayed matrix or memory area.

Pressing the knob down accepts a displayed value, selects another mode, or exits a display or selection (menu).

5.2 LC display

In order to be able to display detailed information from the control unit, an LC display with 2 lines of 16 characters each is provided (Fig. 1 No. 3). On this display, for example, the active operating mode of the control unit or the movement status of the motor (opening, closing) are shown in plain text.

DS150 FU62.3
hold to run operation

The backlighting of the display is active as long as entries are made on the rotary and selection switches. The illumination goes out 20 seconds after the last operation. However, it can be switched on again at any time by turning the selection switch.

Information:
After switching on the controller, or after a reset of the software, the illumination of the display flashes for a few seconds. This signals the start process of the program.

5.2.1 Operating mode Display

The following representations are available in the operating mode display of the LC display:

Display	Meaning
ATC150 Pe:x.xxr	Start display of the peripheral controller program (during synchronization with the motor controller)
DS150 FU62.3 Hold to run operation	Hold to Run operating mode; sleep mode
Hold to run operation Open	Hold to Run Mode; open gate is active
Hold to run operation Close	Hold to Run Mode; close gate is active
DS150 FU62.3 Automatic operation	Automatic operating mode; sleep mode
Automatic operation Open	Automatic mode; open gate is active
Automatic operation Close	Automatic mode; close gate is active
Automatic operation Immediate stop	Automatic mode; gate is stopped
Automatic operation Close: tt	Automatic mode; gate will close automatically in tt seconds
Auto.Closing ON --------- ?	The controller waits for the first operation command after switching on or reset

5.2.2 Sensor Display

With the help of the display, detailed information about the configured sensors is also possible. By pressing the rotary and selection switch, the current status of the set sensors is listed. By turning the switch, the individual sensors are displayed in order.
In the first line, the sensor from the parameter list is named.
The second line shows the current status of the sensor. A „1“ represents an active sensor, a „0“ an inactive one. These displays are constantly updated and allow easy troubleshooting. These displays are also overwritten by the operating mode display 60 seconds after the last operation of the rotary switch. Sensors that are not installed (specified by parameters in the program) are also not displayed.

Display	Meaning
Sensors start	By turning the selector switch to the left, the first entry of the sensor table is reached
LimitSwitchOPEN Figure: 2 => x	Current value of the end switch for the opening direction of the gate
LimitSwitchCLOSE Figure: 1 => x	Current value of the end switch for the closing direction of the gate
Incr. Encoder Figure: ..	Current value of the incremental encoder (if implemented in the program)
StatEdgeOPEN Figure: 1 => x	State of the fixed safety contact edge for the opening direction of the gate.
StatEdgCLOSE Figure: 1 => x	State of the fixed safety contact edge for the closing direction of the gate.
Mov.EdgeOPEN Figure: 1 => x	State of the moving safety contact edge for the opening direction of the gate.
Mov.EdgeCLOSE Figure: 1 => x	State of the moving safety contact edge for the closing direction of the gate.
Lightbarrier Figure: 1 => x	Current status of the light curtain
End of Sensors	The last entry in this sensor table is reached by turning the selector switch to the right

5.2.3 Error / event display

The display proactively shows information about some error reports and special events of the control unit or the gate without the operator having to first browse through the diagnostics menu or the sensor display.

How does the proactive display work?

This insertion of events in the display only takes place during the operating mode representation. The error and event display is not active during the sensor display or in the menu display..

If several events are activated at the same time, they will be displayed one after the other for 2 seconds each.

The displayed reports refer to the section „Parameter reference or error numbers“ (Chap: 6.25) of this document.

Examples of proactive insertion

- Immediately after switching on the controller, the report „250 ProgramInit“ is displayed for a short time to indicate that the controller has started correctly.
- If both hold to run buttons of the control are pressed simultaneously for more than 2 seconds, the report „161 Stop Immediately“ is displayed.
- If both end switches (OPEN and CLOSE) are activated (not at +24 volt level), „215 Limits undef.“ appears in the display to indicate the faulty function or the incorrect connection. This important error display is only removed again when the control is restarted or when a functioning motor run has been started.
- If some special inputs are activated for a longer time (than usual), the reference is also displayed:
  For example, if the Stop button is active for longer than 2 seconds, „161 Stop Immediately“ is displayed.
  The safety contact edges or the light curtain are also displayed after a longer activation time.

5.3 Menu System

Large parts of the control functions of the DRICO slife are realized via changeable parameters that are stored in the device. These parameters are loaded into the control unit ex works and provide for the specific behavior of a defined gate. Many of these parameters can be made accessible to the user or setter of the gate control via the menu system.

5.3.1 Password entry

The selection of the menu and the navigation to enter the password will be demonstrated here from the operating mode display. The display shows „Automatic mode“ and the rotary and selection switch is pressed for 2 seconds and released again when the menu display appears. This results in the following display:

```
Main Menu
1 Identification
```

Any activity of the drive is interrupted immediately: The motor is stopped and all running timers are deactivated.

In this state, the individual menu items can be accessed by turning the selection switch and then selected by pressing it. The first menu item within a menu level leads back one level.

Turning the dial clockwise one notch to the right displays the following message:

```
Main Menu
2 Service Menu
```

By briefly pressing the selection switch, this menu item can be activated and one menu level further down is reached in the service menu:

```
Service Menu
1 Password entry
```

Pressing the selection switch again activates this menu item and takes you to the input for the password:

```
Password entry
Figure: 3xxxx
```

You can change the displayed value by rotating it. In doing so, faster rotary movements lead to a faster change of the values.
Pressing saves the currently set value and the previous menu item is displayed again:

```
Service Menu
1 Password entry
```

If the correct password has been entered (not: 33333), then the hidden menu items and entries that were previously hidden can be selected immediately. A valid password remains active for 10 minutes and then automatically resets itself to the value 33333. If you enter a number other than a correct password, this number remains stored and is not reset to the value 33333 after 10 minutes.

Within the menu entries, pressing the selection switch for 2 seconds at any time can directly open the main menu

```
Main Menu
EXIT
```

can be selected. By confirming this menu item, the control software restarts the program (reset) and returns to the active operating mode..

5.3.2 Menu-Overview

The menu system of the DS FU62 controller offers, in the overview, the following possibilities:

1. Identification

- Master Version — Built-in program versions
- Gate Type — Control variant
- Serialnumber — Individual serial number of the controller and PAN
- Motor Controller — Program version of the motor controller
- Peri.Controller — Program version of the peripheral controller
- Parameter set — Version of the installed parameter table
- Bootloader Motor — Version of the bootloader program from the motor controller
- Bootloader Peri. — Version of the bootloader program from the peripheral controller

2. Service Menu

- Password Input — Access (password) for the service technician and activation of additional features.
- language — Selection of another display language in the LC display
- Mot.RotationDir. — Changing the direction of motor rotation left / right
- CalendarChoice — Selection of the possibility to use the integrated weekly calendar
- Emergency Param. — Selection for opening or closing in case of emergency activation
- RF coding — Selection of a different evaluation coding for the radio handheld transmitters
- Motor Speed — Choice of 33, 50, 62 and 75 Hz maximum motor speed
- PWM Boost — Voltage boost at low motor speeds

3. Diagnosis

- Gate State — Status of the control system / gate, inputs and outputs and maintenance information
- Sensor State — Configuration and condition of the connectable sensors
- System Logbook — Table of the last occurred events and errors including their timestamp (operating time)
- Temperatures — Displays the temperatures of the power electronics

4. Options

• Set timer	Menu for setting various timers (feed times, etc.)
• Inputs / Outputs	Selection of functions at inputs In3, In4 and In5 and at outputs Rel4 and Rel5
• Safeties	Selection of the installed safety sensors on the gate, as well as the activation of the reference run.
• Spec.Parameter	Settings for maintenance requests
• Operating mode	Selection between dead man operation and Automatic mode
• ParameterSecuri.	Menu for backup and reset of adjustable parameters
• State Indicator	Settings for gate status messages as relay output

5. Clock / Calendar

• Display Clock	Display of current date and time of the conrol unit
• Set Date/Time	Menu to set the clock manually
• Cal.Activation	Activation / deactivation of the built-in calendar function
• Disp.Week Cal.	Menu for displaying the entered gate functions in the weekly calendar
• Edit Week Cal.	Editing possibility of the integrated weekly calendar
• Disp.Year Cal.	Display of the registered gate functions in the annual calendar
• Edit Year Cal.	Editing possibility of the integrated annual calendar

6. Radio remote control

• Active Transmit.	Display of the number of paired radio transmitters
• Progr.Key TOGGLE	Teach-in new handheld transmitter (key) for the toggle pulse function (TOGGLE)
• Prog.Key OPEN	Teach-in new handheld transmitter (key) for the OPEN function
• Prog.Key CLOSE	Teach-in new handheld transmitter (key) for the CLOSE function
• Prog.Part.OPEN	Teach-in a new handheld transmitter (key) for the Partial OPEN function (person passage)
• Delete Transmit.	Delete a handheld transmitter (key) that has already been learned and stored by receiving it again.
• Del. PlaceNo	Delete a handheld transmitter (key) from the listed table
• Delete all	Delete all stored handheld transmitters (keys)

5.3.3 Menu structure, texts and references

After selecting the menu, you enter the main menu level. This offers the selection of several submenus. The menu system can be exited again with the first menu item „EXIT“. With a restart (reset), you return to the active operating mode of the control. The depth of the menus depends on the input of the correct password. From the submenus of the first level there are branches to submenus of the second level.

The entries with a red background in the submenus of the following menu listing can only be accessed with the correct password.

Main menu level	First sublevel menu	Second sublevel menu
EXIT		
1 Identification		**(Chapter: 6.24.1)**
	Menu back	
	1 Master Version	
	2 Gate Type	
	3 Serialnumber	
	4 Motor Controller	
	5 Peri.Controller	
	6 Parameter Set	
	7 Bootloader Motor	
	8 Bootloader Peri.	
2 Service Menu		
	Menu back	
	1 Password entry	(Chapter: 5.3.1)
	2 Language	(Chapter: 5.4)
		Menu back
		1 German
		2 English
		3 French
	3 Mot.RotationDir.	(Chapter: 6.3)
	4 CalendarChoice	(Chapter: 6.23)
	5 Emergency Param.	(Chapter: 6.11.7)
	6 Radio encoding	(Chapter: 6.21.6)
	7 Motor speed	(Chapter: 6.9)
		Menu back
		1 Speed regular
		2 Speed medium
		3 Speed fast
		4 Speed slow
	8 PWM Boost	(Chapter: 6.4)
3 Diagnosis		
	Menu back	
	1 Gate State	(Chapter: 6.24.2)
		Menu back
		1 Gate Situation
		2 Input: 87654321
		3 Output: 54321
		4 Completed Cycles
		5 Motor runtime
		6 Last Service
		7 RESET Service(Chapter: 6.19.5)
	2 Sensor State	(Chapter: 6.24.3)
	3 System log	(Chapter: 6.24.6)
	4 Temperatures	(Chapter: 6.24.5)

Main menu level	First sublevel menu	Second sublevel menu
		Menu back
		1 CPU Temperature
		2 FC Temperature
		3 RESET Min/Max.
4 Settings		
	Menu back	
	1 Set timer	
		Menu back
		1 Lighting (s) (Chapter: 6.18.1)
		2 TMR Keep Open (Chapter: 6.18.2)
		3 TMR KeepPartOpen(Chapter: 6.18.3)
		4 TMR Autom. Close (Chapter: 6.18.4)
		5 Secondary Time (Chapter: 6.18.5)
		6 FlashlightPremon (Chapter: 6.12)
		7 RuntimeUntilOPEN (Chapter: 6.18.7)
		8 Zeit Vorendsch.(Chapter: 6.18.8)
	2 Inputs / outputs	(Chapter: 6.11)
		Menu back
		1 In3
		2 In4
		3 In5
		4 OUT Rel4
		5 OUT Rel5
	3 Safeties	
		Menu back
		1 Lightbarrier (Chapter: 6.8)
		2 StatEdgeOPEN (Chapter: 6.6)
		3 StatedgeCLOSE (Chapter: 6.6)
		4 Mov.EdgeOPEN (Chapter: 6.7)
		5 Mov.EdgeCLOSE (Chapter: 6.7)
		6 Learn Limits (Chapter: 6.10)
	4 Spec.Parameter	
		Menu back
		1 Cycles ToService (Chapter: 6.19.1)
		2 Serv.Interv. (Chapter: 6.19.2)
		3 Service Action(Chapter: 6.19.3)
	5 Operating Mode	
		Menu back
		1 Hold to operation(Chapter: 3.4.1)
		2 Automatic operation (Chapter: 3.4.2)
	6 Param. Backup	(Chapter: 6.20)
		Menu back
		1 Restore (Chapter: 6.20.1)
		2 Save (Chapter: 6.20.2)
	7 State Indicator	(Chapter: 6.13)
		Menu back

Main menu level	First sublevel menu	Second sublevel menu
		1 Gate State 1
		2 Outp.GateSt. 1
		3 Gate State 2
		4 Outp.GateSt. 2
5 Clock / Calendar		
	Menu back	
	1 Display Clock	(Chapter: 6.22.1)
	2 Set Date/Time	(Chapter: 6.22.2)
		Menu back
		Year
		Month
		Day
		Hour
		Minute
		Second
		Daylight Saving
		Now DaylightSav?
	3 Cal.Activation	(from this point only if CalendarChoice > 0) (Chapter: 6.23.1)
	4 Disp.Week Cal.	(Chapter: 6.23.2)
	5 Edit Week Cal.	
		Menu back
		1 Set Weekdays(Chapter: 6.23.3)
		2 Delete week (Chapter: 6.23.7)
	6 Disp.Year Cal.	(from this point only if CalendarChoice = 2)
	7 Edit Year Cal.	
		Menu back
		1 Set day (Chapter: 6.23.9)
		2 Del. Year Cal.(Chapter: 6.23.13)
6 RF Remote Ctrl.		**(Chapter: 6.21)**
	Menu back	
	1 Active Transmit.	(Chapter: 6.21.1)
	2 Progr.Key TOGGLE	(Chapter: 6.21.2)
	3 Prog.Key OPEN	(Chapter: 6.21.2)
	4 Prog.Key CLOSE	(Chapter: 6.21.2)
	5 Prog.Part.OPEN	(Chapter: 6.21.2)
	6 Delete Transmit.	(Chapter: 6.21.3)
	7 Delete PlaceNo.	(Chapter: 6.21.4)
	8 Delete all	(Chapter: 6.21.5)

5.4 Select the Menu language

The national language used for display in the control unit can be changed in the „Service Menu“ in the „ National language“ option. For this purpose, the desired language is selected and activated. When a new language is selected, the further display is directly shown in this language.

6 Setting up the gate and the control system

The following installations and possibly parameterizations are useful or necessary for commissioning the control unit and setting up the gate. All configurations and displays that should only be accessible to a trained technician are protected by a password.

6.1 Stop Function

A STOP button or switch is provided at the input „In6“. This element must be configured as a normally closed contact. Several NC elements can also be connected in series in the form of a STOP chain (e.g. motor temperature switch, access switch, EMERGENCY STOP). This can be used to stop a running motor or prevent the motor from starting.

If no STOP operating function is desired on the gate, a wire jumper must be provided between 24 V and this input.

6.2 Command keys for Hold TO Run Mode

Before a gate can be put into operation, at least one OPEN and one CLOSE button must be connected for operation without self-locking (Hold To Run). These buttons are necessary for setting up the end positions. To do so the following steps have to be done in this order:

- Disconnect the control unit from the power supply
- Connect the power supply of the push buttons to 24 V
- Connect push button for OPEN [Hold to run button] to input terminal In8 (normally open contact)
- Connect push button for CLOSE [Hold to run button] to the input terminal In7 (normally open contact).
- Switch on the power supply to the control unit and check the function of the keys in the Hold to Run Mode

In the automatic operating mode, the push buttons function similarly to the command transmitters for operation with self-locking. Even with a short impulse, the corresponding gate travel is triggered and the motor is not stopped again when the button is released. The prerequisite for this is, of course, the intact safety of the gate.

6.3 Change of travel direction of the drive

If during the very first start-up of the motor on the gate it is observed that the gate mechanically moves in the wrong direction, the direction of rotation of the motor can be switched by exchanging two motor supply cables.
On the other hand, it is also possible to change the direction of motor rotation via a software setting on the controller. This change is done as described below:

- Menu: „Service Menu“, „Password input“: Enter password
- Menu: „Service Menu“, „Direction of motor rotation“: Change value to „1“.
- Exit menu and check the correct movement of the gate again!

Attention:
After changing the direction of rotation of the motor, it is essential to check (possibly in hold to run operation) that the end positions of the gate can be correctly detected and controlled.

6.4 Setting the boost value

Frequency converters supply the connected electric motor with less than 230 volts AC at frequencies lower than 50 hertz. As the frequency increases, the voltage is also increased until the 230 volts are reached at 50 Hz. This serves to limit the maximum current flowing and not to overload the whole system.
If the motor does not develop enough torque at low speeds, the voltage and thus the current output at low frequency can be increased by increasing the boost value. The „PWM Boost“ can be set as followed:

- Menu: „Service Menu“, „Password input“: Enter password
- Menu: „Service aMenu“, „PWM boost“: Enter value

Attention:
Unnecessarily high boost values lead to high power consumption and strong heat generation. Values that are too low can cause the gate not to move under unfavorable conditions (large gate mass, stiff mechanics, low temperatures).

6.5 Changing the operating mode: Hold To Run Mode / Automatic Mode

The installer can switch the control unit, which normally runs in automatic mode, specifically to dhold to run mode. The door can then only be controlled with the connected hold to run buttons for the OPEN and CLOSE directions (IN8 and IN7). The external safety devices (safety contact edges and light barrier) are deactivated.

- Menu: „Service Menu“, „Password input“: Enter password
- Menu: „Settings“, „Operation mode“: Select operating mode
- Exit menu

6.6 Stationary safety contact edges (SKL)

The stationary safety contact edges (SKL) must be connected as described in Chapter 4.3.3. The evaluation of the connected edges is always activated by default. This can be changed separately for both directions of travel in the following way:

- Menu: „Service Menu“, „Password input“ Enter password
- Menu: „Settings“, „ Safeties“, „StatEdgCLOSE “: Set value to „0“
- Exit menu

The value „0“ deactivates the evaluation of the stationary safety edge(s) for the direction of drive CLOSED in the software. The value „1“ activates the evaluation (default setting).
With the possible setting value „2“, the software of the control unit performs a test at the input of the corresponding safety edge during the built-in self-test. This could be used to test a self-looped radio transmission system for the safety contact edges that drive together with the door blade in accordance with category 2.

6.7 Moving safety contact edges (ISK)

The ISK system (especially the stationary coil core SPK55) is connected as described in chapter 4.3.4. The evaluation of the moving safety contact edges is always activated in default setting. This can be changed separately for both directions of travel in the following way:

- Menu: „Service Menu“, „Password input“: Enter password
- Menu: „Settings“, „Safeties“, „ Mov.EdgeOPEN“: Set value to „0“
- Exit menu

The value „0“ deactivates the evaluation of the moving safety edge for the direction of travel OPEN in the software. The value „1“ activates the evaluation (default setting).

6.8 Light barrier

A one-way Lightbarrier (without testing) is installed and parameterized in the following way:

- Disconnect the control unit from the power supply
- Mount the transmitter and receiver of the light barrier in a mechanically reasonable way
- Connect both modules with the electrical supply 0 V and 24 V from the controller
- Connect the signal line from the receiver module to the ‚LB in‘ terminal.
- Switch on the power supply of the control
- Menu: „Service Menu“, „Password input“: Enter password
- Menu: „Settings“, „Safeties“, „Lightbarrier“ set to value 1
- Exit menu
- Check the correct connection of the light curtain with the display „Sensor representation“ and the reaction of the door with the direction of travel CLOSED in „Automatic mode“

In the FU62, this setting is already preset in the menu.

6.9 Set motor speed

In automatic mode, different motor speeds can be preset for gates of different sizes and weights. In addition to the „normal“ (50 Hz) speed {preset}, the „medium“ (62 Hz) and the „fast“ (75 Hz) speed can also be selected.

In addition, a fourth, slow speed with 33 Hz can be selected for special applications. When the slow speed is activated, the speed for dead-man operation and the approach speed before the end positions are also reduced from 33 Hz to 24 Hz.

For safety reasons, the forces measured at the main and secondary closing edges of the door must of course be taken into account when selecting the speed.

The speed can be selected after entering the password under „Service Menu“, „Motor speed“. After changing the speed, a new reference run is automatically necessary.

6.10 Reference travel (setting the end positions)

To enable the drive motor to reduce its maximum speed shortly before reaching the end switches, the control system must measure the motor running time between the end positions of the door by means of a reference run. Then, based on the running time, starting from the respective end switch as a reference point, it can estimate the running path of the gate and move more slowly to the end positions of the gate.

When the controller is delivered, this reference run is preset as soon as the automatic mode is selected for the first time.

If this reference run is to be activated again, it can be done in the following way:

- Menu: „Service Menu“, „Password input“: Enter password
- Menu: „Settings“, „ Securities“, „Reference run“: Set value to „2“
- Menu: „Settings“, „Operating mode“, „Automatic mode“ (if not already active)
- Exit the menu again. The controller performs a reset and is in automatic mode
- Press CLOSE button. Door moves in the direction of the CLOSED position
- When the CLOSED end switch is reached, the door stops and moves automatically at slow speed in the OPEN direction
- When the OPEN end switch is reached, the gate stops again and saves the measured running time. The control then performs a restart
- Check the slower approach of the two end positions and the stopping of the motor when the end positions are reached

Attention:
The teach-in of the motor run time must always start first with the approach of the CLOSED position. The runtime measurement then takes place from the CLOSED position to the OPEN position.

6.11 Command keys for Latching Mode

The program of the DS FU62 control unit is preset at the factory so that it starts in hold to run mode. After the basic installations from the previous chapters, the installation of the gate for automatic operation (activating gate travels in Latching Mode) can now be tackled.

Basically, the controller performs a test of the configured inputs at startup after a program reset or when switching on the power. Active move commands (NC contacts that are statically pulled to GND, NO contacts that are statically pulled to +24 V) do not cause the controller to start the motor uncontrolled now. The controller will only attempt to start the motor with a newly activated move command if there are no safety concerns.

The operating elements at the inputs In3 to In5 are reserved exclusively for automatic operation with in Latching Mode. The functions listed in the table in chapter 4.3.2 are preset. At each of the three inputs In3 to In5, one of the functions can be selected by the coded number from the following table, if the function has not already been assigned to another input:

Figure	24 V Input function
0	No function at this input
1	OPEN Pulse NO move gate in direction OPEN
2	Part OPEN Impulse NO (start person passage) in automatic mode
3	CLOSE Impulse NO Gate move in direction CLOSE
5	OPEN / CLOSE NO (pull switch function) [OPEN pulse when the gate is not open / CLOSE pulse when the gate is open and no supply timer is active]
7	Toggle pulse NO (TOGGLE) [OPEN, STOP, CLOSE, STOP, OPEN, STOP, ...]
10	STOP NC (**normally closed contact**; low active)
11	Emergency STOP NC (**normally closed contact** supplied via test output 24 V⎍⎍⎍⁻)
14	STOP NO (normally open contact; high active)
17	Position STOP NO (stop the motor when this proximity switch reaches the intermediate position)
18	OPEN End switch NC (**normally closed contact**; low active)
19	CLOSED End switch NC (**normally closed contact**; low active)
28	**Switch off** parameterized calendar functions NO (switch calendar inactive as long as 24 volts are applied to this input)
29	**Switch off** closing timer NO (the set closing timers of the gate are deactivated as long as 24 volts are applied to this input).
30	Emergency activation NC (**normally closed contact** supplied via **test output** 24 V⎍⎍⎍⁻) [only in conjunction with the „Emergency behavior“ parameter] Chapter 6.11.7
31	HTR open NO (Hold To Run function) The door only moves in the OPEN direction in automatic mode as long as the button remains pressed.
32	HTR close NO (Hold To Run function) The door only moves in CLOSE direction in automatic mode as long as the button remains pressed.

6.11.1 Control Button OPEN

In order to be able to open the gate in automatic mode (in Latching Mode), the connection of an ‚OPEN‘ button (normally open contact) to the „In5“ input is provided. The input is configured so that it moves the gate in the OPEN direction when activated until the end switch is reached. If an installed safety edge for this direction of travel is activated during this travel, the motor brakes quickly and travels in the opposite direction before stopping.

This contact could also be operated by a timer, loop detector or similar electronics.

6.11.2 Control Button CLOSE

For closing the gate in automatic mode (with latching mode), a ‚CLOSE‘ push button (normally open contact) is connected to input „In4“. Activating this input causes the gate to move in the CLOSE direction until the „gate closed“ end position is reached. If an installed safety edge for this direction of travel is activated during this travel, the motor brakes quickly and travels in the opposite direction to the OPEN end position (or partially OPEN if it started from there).

6.11.3 Control Button toggle impulse button (TOGGLE)

A push button can be connected to input „In3“, which generates OPEN, STOP, CLOSE, STOP operation commands by a toggle pulse (TOGGLE function). With each new push button operation, either the motor operation is started, or a running operation is interrupted by a stop command. The new travel direction is always opposite to the last one. This function is only supported in automatic mode.

6.11.4 Part OPEN function (Pedestrian Open)

To set up a Part. OPEN function (Pedestrian Open), a push button or switch contact (normally open contact) is connected to the desired input, which is configured with the value „2“ (for partial OPEN). The opening width of the gate from the CLOSED position to the Part. OPEN position is controlled by the motor running time and can be changed in the menu as described in Chapter 6.18.7.
Activating this input „Partial OPEN function“ leads to the following actions of the gate:

- If the gate is in the OPEN or Part. OPEN position, no action is performed
- If the gate is in any other position, the controller will attempt to move to the Part. OPEN position if it is not prevented from doing so by other commanders or sensors
- If the gate is already moving to the OPEN position, it does not stop at the part. OPEN position and does not move back to this position.
- If the gate moves to the CLOSED position, the control unit attempts to move to the Part. OPEN position instead, if it is not prevented from doing so by other command generators or sensors.

6.11.5 Operating button OPEN / CLOSE

An input can be configured to which a push button / pull switch can be connected, which generates OPEN or CLOSE travel commands by means of a switch impulse.
As long as the gate is **not** in the OPEN position, an OPEN pulse is generated at this input.

If the gate is **open**, a CLOSE command is generated when the button is pressed.

6.11.6 Emergency Stop Input

An emergency STOP switch can be connected to one of the inputs In3 to In5. The switch must be a normally closed contact. For example, special emergency stop switches or motor fuse contacts can be connected in this way. The functionality of the emergency STOP input is constantly monitored by the software. Therefore the supply is only possible via the test output „24V ⊓⊔⊓“. If an error is detected, the control unit can no longer be operated. A corresponding error text is shown in the display. If the emergency STOP input is reactivated, the control unit performs a restart (reset).

An example installation with a normally closed contact at input In3 is shown below:

- Disconnect the control unit from the power supply
- Connect the voltage supply of the break contact to the test output 24V ⊓⊔⊓
- Connect normally closed contact to input In3
- Switch on the power supply of the control
- Menu: „Service Menu“, „Password input“: Enter password
- Menu: „Settings“, „Inputs / Outputs“, „In3“: set to „11“.
- Exit menu

The emergency STOP function of the control with parameter value 11 on input In3 can now be checked.

6.11.7 Emergency function

The emergency function allows the gate to be opened or closed remotely by a fire alarm panel in automatic mode with full safety (depending on the parameter setting). For this purpose, the alarm loop of the fire alarm panel must behave like a normally closed contact. When not in use, this loop is always closed and is checked by the control unit. Therefore, the supply is only possible via the test output „24V ⊓⊔“.

The message loop for the emergency is set up like in the following example:

- Disconnect the control unit from the power supply
- Connect the voltage supply of the break contact to the test output 24V ⊓⊔
- Connect normally closed contact to input In3
- Switch on the power supply of the control
- Menu: „Service Menu“, „Password input“: Enter password
- Menu: „Settings“, „Inputs / Outputs“, „In3“: set to „30“

Emergency opening:

If the alarm loop is opened by the fire alarm panel and an emergency permission for opening is set up, the gate will be opened at a slow speed. This opening can be interrupted by the stop button or the safety elements, but the gate will continue to open after the end of the interruption.
The gate then stops in the open position and no longer reacts to any inputs. If the message loop to the FACP is closed again, the control unit performs a reset. The gate can then be closed again with the next request.

- Menu: „Service Menu“, „Password input“: Enter password
- Menu: „Service Menu“, „Emergency behavior“: set to „1“.
- Leave menu
- Check EMERGENCY function

Emergency closing:

In the emergency closing setup, the gate is closed at a slow speed when the detection loop is opened by the fire alarm panel. This closing process can be interrupted by the stop button or the safety elements. However, the gate will continue to close after the end of the interruption.
In the closed position, the gate stops and no longer reacts to any inputs. If the loop to the FACP is closed again, the control system performs a reset. The gate can be opened again with the next request.

The function is activated in the Service Menu:

- Menu: „Service Menu“, „Password entry“: Enter password.
- Menu: „Service Menu“, „Emergency Behavior“: Set to „2“.
- Leave menu.
- Check the EMERGENCY function.

6.12 Flashing light

The output of relay ‚Rel1' is factory set for the flashing function.
A self-flashing light for +24 V is connected to relay ‚Rel1' as follows.

- S Disconnect the control unit from the power supply.
- Connect +24 volt supply to output relay ‚Rel1'.
- Connect the flashing light to the output relay ‚Rel1' and to GND (0 volts).
- Switch on the power supply to the control unit.

The flashing light is switched on by the controller as soon as a travel command is detected and can be executed by the controller. It remains active as long as the motor is controlled.

Three seconds before an automatic closing of the gate, the relay for the flashing light is also switched on and remains activated during the closing of the gate.

In some countries, it is mandatory to activate this prewarning for three seconds before each gate movement (also before opening). Only then is the motor activated and the gate moved. This general prewarning can be switched on or off as follows:

- Menu: „Service Menu", „Password Entry": Enter password.
- Menu: „Settings", „Set timer", „Blink prewarning":
  - 0 = general prewarning time switched off
  - 1 = switched on

If a parameterized maintenance event for the door is reached and the operator of the door system is to be made aware of this, the flashing light can be configured accordingly. How this is done is explained in more detail in Chapter „6.19.3 Maintenance request with flashing light".

6.13 Gate status indicators

The DRICO slife can signal two different gate states via relay outputs.
The factory setting of the „Rel2" output relay is such that it is active when the gate is in the OPEN position, i.e. the contact is closed. The output relay „Rel3" is set so that it is active when the gate is „CLOSED".
If one of these two relays is to be used for another function, this function Status indication must first be down-configured from the relays. Only then can the corresponding relay be parameterized with the new function. The deactivation of the status indication „gate CLOSED" on relay 3 is realized as follows:

- Menu: „Service Menu", „Password Entry": Enter password.
- Menu: „Settings", „Status report", „Gate status 2 output": set to „----".

This means that the gate state 2 function (gate CLOSED) is no longer signaled with relay 3. This relay can now be parameterized with a new function.

6.14 Optional relay functions at Rel4 and Rel5

The two changeover relays Rel4 and Rel5 can optionally each be configured with one of the functions from the following table.

Value	Relay output function
0	No Funktion
6	Status indication: Maintenance required (cycle counter, maintenance interval reached)
7	Status indication: Fault / error occurred (after all error conditions have been terminated, this relay is kept active for approx. 2 seconds)
11	Activation of an additional external motor brake (relay is active when the motor is running)
16	Status indication: Safety in CLOSE direction is activated
17	Status indication: Safety in CLOSE direction is activated while the motor is moving
18	Status indication: Safety in OPEN direction is activated
19	Status indication: Safety in OPEN direction is activated while the motor is moving
20	Simple traffic light control [RED / GREEN] (relay is active when the gate is in the OPEN position and the flashing light is not active).
21	Output for lighting [only if the timer for the lighting is not equal to 0] (relay is active when the flashing light is active and also for the time set in the timer for the lighting).
25	One or more safety contact edges are activated
27	Status indication: Motor has maximum speed in OPEN direction
28	Status indication: Motor has maximum speed in CLOSE direction
29	Status indication: motor has maximum speed regardless of direction

The selection in the menu is done as described below:

- Connect the device to be controlled to the desired output Rel4 or Rel5.
- Menu: „Service Menu“, „Password Entry“: Enter password.
- Menu: „Settings“, „Inputs / Outputs“, „OUT Rel4“ or „OUT Rel5“: set to the value from the above table.
- Exit menu and test the function of the output.

6.15 Additional electromechanical brake

An additional electromechanical brake can be parameterized to an output relay. The relay switches as soon as the motor is supplied by the controller (brake is released). When the motor is switched off, the relay also drops out again (brake fixed).

6.16 Fault signaling

The control unit can switch on a relay in case of some recognizable faults of the gate or also of the control unit itself, in order to indicate the fault or the incorrect operating condition in an easily recognizable way by means of a signal light. More detailed information can then be obtained from the display of the control unit.
The installation of such a fault indication is possible on Rel4 or Rel5 and will be described here as an example for Rel5.

- Disconnect the control unit from the power supply. Disconnect the control unit from the power supply.
- Connect the signal lamp to the output relay Rel5.
- Switch on the power supply to the control unit.
- Menu: „Service Menu“, „Password Entry“: Enter password.
- Menu: „Settings“, „Inputs / Outputs“, „OUT Rel5“: set to „7“.

The lamp connected to „Rel5“ is switched on by the controller as soon as an event / error or fault from the following list occurs:

(25, 26, 27, 28, 33, 40, 86, 161, 171, 172, 210, 213, 214, 215, 225, 226, 234, 235)

- The numbers in the list refer to the „Reference / Error number“ from Chapter 6.25.
- Short-term events are displayed extended by about 2 seconds (e.g. safety edge activated).
- A constantly activated STOP input is only displayed after 2 seconds.
- A permanently activated light barrier is only signaled after 10 seconds.
- Events concerning the motor run or the gate end positions are displayed until another correct motor run has been performed (e.g. run time error, limit switch error, incremental encoder error).

6.17 Traffic light

A basic traffic light circuit can be realized for example with the changeover relay Rel5. The red and green lights of the traffic lights are connected to the two normally open contacts of the changeover relay, as described in Chapter 4.4 in the table. The maximum load capacity of the relays must be observed.

The traffic light switches to „GREEN“ when the gate has reached the OPEN position, the gate motor is switched off and the flashing light is not active. Conversely, the traffic light switches to „RED“ as soon as the flashing light is activated (advance warning for closing from the OPEN position), the motor is switched on, or the gate is not in the OPEN position.

The function can be set up on the Rel5 output relay as follows:

- Disconnect the control unit from the power supply.
- Connect the signal lamps of the traffic light(s) to the output relay Rel5.
- Switch on the power supply to the control unit.
- Menu: „Service Menu“, „Password Entry“: Enter password.
- Menu: „Settings“, „Inputs / Outputs“, „OUT Rel5“: set to „20“.
- Exit menu.

6.18 Timer Settings

Some gate movements can be triggered automatically in automatic mode by predefined timer settings. The parameterization via menu of these times as well as other timers will be shown here.

6.18.1 Lighting (yard light)

The DRICO slife can control a light which, for example, automatically illuminates the area of the gate during a journey. The function can be set up on Rel2 to Rel5 if the assignment of these relays has been made free beforehand. As an example, the setup for Rel3 is described here.

- Disconnect the control unit from the power supply.
- Connect the lamp to the output relay Rel3.
- Switch on the power supply to the control unit.
- Menu: „Service Menu“, „Password Entry“: Enter password.
- Menu: „Settings“, „Spec.Parameter“, „Light Output“: set to „Rel3“.
- Menu: „Settings“, „Set timer“, „Lighting (s)“: Set time value.
- Exit menu.

The lamp connected to „Rel3“ is now switched on by the controller as soon as a travel command is detected. After the motor is switched off, the lamp continues to light for the corresponding time (1 to 1800 seconds).
This parameter „Lighting (s)“ can also be changed by the customer without entering a password.

6.18.2 Hold open time

The gate can be closed again automatically by the control unit after an adjustable time (0 to 3600 seconds) when the OPEN end position is reached. If a value of 0 is entered, the closing timer is switched off and the gate remains open until the next CLOSE command.

- Menu: „Settings“, „Set timer“, „TMR Keep Open“: Set time value.

Example:
A set parameter „TMR Keep open“ with the value 5 causes a time counter to be started in automatic mode when the OPEN end position is reached, which causes the door to close again automatically after 5 seconds. If during this time another OPEN command is given or an installed light barrier is activated, the time counter starts again.
This value can also be entered by the customer without entering the password.

The closing timer is not activated when the maximum number of reversals for the CLOSE direction is reached:
If the door moves in the CLOSE direction and does not reach the CLOSED position because a corresponding safety contact edge (no light barrier) is activated, the door moves again to the OPEN position. Thereupon, the closing timer starts again. Such an action can be performed a maximum of 5 times in succession. After this, the gate then remains open and does not restart the time counter. Only with the next CLOSE command and after reaching the CLOSED position is the reversing counter set to 0 again, and the next time the door is opened, the closing timer also starts again.

6.18.3 Closing Time from Part Open Position

The control unit can close the door again automatically after an adjustable time (0 to 255 seconds) when it reaches the partail Open position. If a value of 0 is entered, the closing timer is switched off and the gate remains in the partial OPEN position until the next CLOSE or OPEN command.

- Menu: „Settings“, „Set timer“, „TMR KeepPartOpen“: set to „xxx“.

Example:
A set parameter „TMR KeepPartOpen“ with the value 5 causes a time counter to be started in automatic mode when the partOpen position is reached, which causes the gate to close again automatically after 5 seconds. If another PartOpen command is given during this time or if a static PartOpen continuous command is present, the time counter starts again.
This value can also be entered by the customer without entering the password.

The same conditions for reversing when a sentir edge is activated as already described for the „Hold open time“ apply to this supply timer.

6.18.4 Closing Time from Intermediate Position

If the gate is to close automatically (automatic closing) after an adjustable time (0 to 255 seconds), irrespective of the two gate positions described above, this must be set via the „TMR Autom. Close“ parameter. This function applies to all positions of the gate, except in the OPEN and Partial OPEN end positions. If the value 0 is entered here, the gate remains in the intermediate position until the next move command.

- Menu: „Service Menu“, „Password Entry“: Enter password.
- Menu: „Settings“, „Set Timer“, „TMR Autom. Close“: Set time value.

Example:
set time 20 causes a time counter to be started in automatic mode when the motor stops outside the CLOSED end position (not when stopped with STOP key), which causes the door to close again automatically after 20 seconds.
This value can only be changed after entering the password.

6.18.5 Closing Time Abort with light barrier

If a light barrier is used, the control system can enter a shorter hold-open time (end position OPEN) after this light barrier has been passed through.

- Menu: „Service Menu“, „Password Entry“: Enter password.
- Menu: „Settings“, „Set Timer“, „Secondary Time (s)“: Set time value.

Example:
A set time of 5 causes a time counter to be started in the OPEN door position after the light barrier has been passed through (signal active and inactive again), which causes the door to close again after 5 seconds.

The default setting for this parameter is 0 (no inlet shortening).
This value can only be changed after entering the password.
The original hold-open time of the gate is only reset when the gate closes again and the light barrier input remains inactive.

6.18.6 Flashing light prewarning

In some countries, it is a requirement that a flashing light must be activated for three seconds as a prewarning before each gate movement (also before driving up). Only then is the motor activated and the gate moved. This general prewarning can be switched on or off as follows:

- Menu: „Service Menu“, „Password Entry“: Enter password.
- Menu: „Settings“, „Set timer“, „FlashlightPremon“:
    - 0 = general prewarning time switched off
    - 1 = switched on

6.18.7 Travel time to Part Open Position

The opening width of the gate from the CLOSED position to the Partial OPEN position depends on the set motor runtime for this path. This preset runtime (600) can be changed in the menu. For this purpose, after entering the correct password in the menu: „Settings“, „Set Timer“, „RunToPartOpen“, the value must be selected larger or smaller (increase or decrease opening width).

- Menu: „Service Menu“, „Password Entry“: Enter password.
- Menu: „Settings“, „Set Timer“, „Runtime PartOPEN “: Select value larger (increase opening width) or smaller (decrease opening width). A set value of 600 corresponds to about 6 seconds of running time. However, motor runtimes (approx. 1 to 2 seconds) for acceleration and deceleration before the position as well as tolerances must be added.
- Exit menu.
- Move gate from CLOSED position to part OPEN position and check opening dimension.

6.18.8 Timer for Pre-Limit Switch

The distance of the braking ramp of the motor before reaching the end positions of the gate is determined during the reference run via the motor running time. Depending on the length of the gate, the speed, the gear ratio and other factors, the individually measured distance may vary somewhat. If the distance of the slow speed before the end position CLOSED or OPEN appears to be too short or too long, this can be changed with the help of the „Time Pre Limit“ parameter. For this purpose, after entering the password in the menu „Settings“, „Set timer“, „Time Pre Limit“. The preset value (200) is reduced or increased depending on whether the slow speed time is to be reduced or increased.

6.19 Maintenance events

To ensure regular maintenance of the gate, some setting options for a maintenance request are provided in the control software. Individual or several of the events listed below can be selected for a maintenance request. The event that occurs first in each case activates the maintenance request of the control system.

6.19.1 Cycle counter

A maintenance request can be requested after a certain number of gate movements. When the defined number of gate movements is reached or exceeded, the ‚Maintenance request' event is triggered in the control system. If a maintenance request is active, the display shows the message

< Maintenance >
required

displayed. In the delivery state, the value for the number of gate movements is preset to 5000 movements. Maintenance by gate cycles can be changed as follows:

- Menu: „Service Menu", „Password input": Enter password
- Menu: „Settings", „Spec.Parameter", „Cycles ToService": Set counter „zz"

The „zz" input defines a number of cycles (in 1000 cycles) that the gate runs „OPEN" and „CLOSED" again. The counter is incremented each time the „CLOSED" end position is reached. When the counter reaches the preset value of „zz", the control unit activates the maintenance request.
The value „zz" is the maximum number of gate cycles (in 1000 cycles) (CLOSED, OPEN, CLOSED) until the service request. The adjustable values mean:

- 0 = No maintenance request after number of driving cycles
- 25 = 25000 complete movements to OPEN and CLOSE again

6.19.2 Maintenance interval

For regular maintenance of the gate, it is intended to define a maintenance request after a certain time (number of months). When the defined time is reached or exceeded, the ‚Maintenance request' event is triggered in the controller. In the delivery state, the value for the time is preset to 12 months. The maintenance interval can be parameterized as follows:

- Menu: „Service Menu", „Password input": Enter password
- Menu: „Settings", „Spec.Parameter ", „Serv.Interv": Set time „mm

The input „mm" defines the number of months until the maintenance request. The value 0 means: no maintenance request by the time. The maximum value that can be set is 60, which corresponds to 5 years.

6.19.3 Maintenance request with flashing light

A maintenance request from the controller can trigger an additional action of the flashing light.

As soon as a condition for the maintenance request is fulfilled, the flashing light is then kept active for a few seconds longer after each travel to the end position of the gate (flashing light only goes out 4, 8 or 12 seconds after the motor has stopped).

The additional activation of the flashing light for the maintenance request can be parameterized in the following way:

- Menu: „Service Menu“, „Password input“: Enter password
- Menu: „Settings“, „Spec.Parameter“, „Service Action“: Set value 0 to 3.

The following actions are linked to the parameter value set here:

Parameter Value	Function of the flashing light when maintenance request is active
0	No advanced flashing light function
1	Flashing light remains on for 4 seconds longer after gate position OPEN or CLOSED is reached
2	Flashing light stays on for 8 seconds longer
3	Flashing light stays on for 12 seconds longer

6.19.4 Maintenance request on relay output

A maintenance request of the control can be parameterized (with „Value 6“) to an output relay „Rel4“ or „Rel5“ (see Chapter: 6.14). As soon as one of the conditions for the maintenance request is fulfilled in the control, the corresponding relay is then switched active and can be used for signaling purposes.

6.19.5 Reset maintenance

As long as a maintenance request has not been completed and confirmed by the service technician in the control unit menu, the text „< MAINTENANCE > required“ is periodically shown again and again in the LC display. In addition, the flashing light is kept active for a few seconds longer after each travel to the end position of the gate (if this has been parameterized).

After the technical maintenance of the gate has been completed and the safety functions have been checked by qualified personnel, this can be confirmed in the control unit in the following way, thus resetting the maintenance request:

- Menu: „Service Menu“, „Password input“: Enter password
- Menu: „Diagnosis“, „Gate status“, „RESET Service“ activate

The time counter for the number of past months, the cycle counter for the number of gate movements and also the motor runtime counter are reset to 0.

6.20 Parameter backup in memory

The set operating parameters can be additionally saved in a separate memory area. A copy of the current setting values is made. These saved setting values can be reloaded later and thus overwrite the current parameters.

6.20.1 Reloading the saved parameters

In the menu „Settings“, „Param. Backup“ there is a selection point with which you can reset all parameters to the last saved values:

- Menu: „Service Menu“, „Password Entry“: Enter password.
- Menu: „Settings“, „Param. Backup“, activate „Restore“.
- After this copying process is completed, the software automatically restarts the controller to work with the new parameters.

This resets the adjustable values (timer, sensors, inputs / outputs, motor values and operating mode) to the last saved values.

6.20.2 Backup of the set parameter values

Die aktuell eingestellten Betriebsparameter der Steuerung können als Sicherungskopie in einem gesonderten Bereich des Speichers abgelegt werden. Nach einer anschließenden, probeweisen Änderung der Parameter kann dann dieser gesicherte Parametersatz im Zweifel wieder als funktionie render Parameterstand zurückgeladen werden.

- Menu: „Service Menu“, „Password Entry“: Enter password.
- Menu: „Settings“, „Param. Backup“, activate „Save“.
- After the copying process is complete, the software reports „Save Done“ in the display.

6.20.3 Backup of the set parameter values

The currently set operating parameters of the controller can be stored as a backup copy in a separate area of the memory. After a subsequent, trial modification of the parameters, this saved parameter set can then be reloaded as a functioning parameter status in case of doubt.

- Menu: „Service Menu“, „Password Entry“: Enter password.
- Menu: „Settings“, „Param.Backup“, activate „save“.
- After the copying process is complete, the software reports „Save Done“ in the display.

6.21 Radio remote control

In the control variant with built-in radio receiver, software is integrated that allows the signals from radio hand-held transmitters to be received and thus the door to be conveniently operated in automatic mode. The hand-held transmitter must match the radio receiver and the set decoding software.

Editing options (such as teaching in or deleting handheld transmitters) are available via menu operation in the control system. A maximum of 50 handheld transmitters (or individual key functions) can be programmed.

6.21.1 Show number of transmitters

In order to be able to execute a gate action with a radio hand-held transmitter, the transmitter must first be made known to the control unit (learned). The number of learned transmitters (occupied memory locations) can be displayed with this menu item.

- Menu: „RF Remote Ctrl.“, activate „Active Transmit.“.

The display shows the number of learned transmitters (or individual key function).

6.21.2 Teach-in new transmitter (key functions) at the controller

Individual keys of a handheld transmitter and their gate action each occupy their own memory location in the control.
The teach-in of a key function of a transmitter can be carried out with the following menu items.

Menu item	Function
2 Progr.Key TOGGLE	Programming a changeover function (OPEN - STOP - CLOSE - STOP)
3 Prog.Key OPEN	Programming a gate OPEN function
4 Prog.Key CLOSE	Programming a gate CLOSE function
5 Prog.Part.OPEN	Programming a partial opening of the gate (pedestrian passage)

After selecting the menu, the function to be taught in is shown in the upper line of the display. The operator now has 20 seconds to press the desired key on the handheld transmitter. A memory location is thus occupied for each individual key function.

The received coding of the transmitter, with the special key pressed, is stored as a comparison value in the memory of the control. The display shows for 2 seconds the decoded numerical value of the received radio signal and the memory location (position) where this transmitter was stored.

```
RF#: xxxxxxxxxxxx
Pos.: p • •
```

In this way, you can see that the signal from the handheld transmitter has also been received.
The display then returns to the menu. By activating this menu item again, further transmitters can now be programmed one after the other.

If the program does not detect a valid code within the 20 seconds after activation of the teach-in process, the display jumps back to the menu.

6.21.3 Delete transmitter

If a specific radio remote control or a special key of a transmitter is to be deleted from the memory of the control, this can be realized via the menu item „Delete Transmit.“.

- Menu: „RF Remote Ctrl.“, „Delete Transmit.“ activate

The display shows „Delete Transmit.“ in the upper line. The operator now has 20 seconds to press the desired key on the handheld transmitter to delete the transmitter from the control unit memory. After deletion, the display jumps back to the menu.

If the program does not detect a valid and stored code within the 20 seconds after activation of the deletion process, the display returns to the menu.

6.21.4 Delete transmitter memory entry

If a specific radio hand-held transmitter or a special key of a transmitter is to be deleted from the memory of the control unit without the corresponding hand-held transmitter being available, this can be done via the menu item „Delete transmitter location“.

- Menu: „RF Remote Ctrl“, „Delete PlaceNo.“ activate

A list of all programmed handheld transmitters and functions is displayed. The memory location to be deleted is selected by turning the selection switch. After pressing the rotary push button, the display asks „Delete PlaceNo.? After pressing the rotary switch again, this entry is deleted and this is confirmed with the display „Done“.

Pressing the push button again causes the menu to return to the „Delete PlaceNo. “ selection.

6.21.5 Delete all transmitters

With the menu function „Delete all“, all radio handheld transmitters are removed from the memory of the control. Neither the corresponding transmitters nor a radio receiver are required for this. After calling up this menu item, remote control of the door by radio hand-held transmitters is no longer possible until the next teach-in process. The deletion of all transmitters can be carried out with the following menu item.

- Menu: „RF Remote Ctrl “, „Delete all“ activate

6.21.6 Change radio coding / decoding software

After entering the password, the technician can select decoding software for the received radio signals. Various routines can be selected for decoding. The selected routine must match the coding of the radio handheld transmitter used.

- Menu: „Service Menu“, „Password Input“: Enter password.
- Menu: „Service Menu“, „RF coding“: Select value.
    - Value 0: no radio evaluation
    - Value 1: currently not used
    - Value 2: Rolling code (constant share)
    - Value 3: 12 bit code (long transmit pulses)
    - Value 4: 36 bit code
    - Value 5: 12 bit code (short transmission pulses)
    - Value 6: Multibit code

6.22 Built in real time clock

With the help of the clock module built into the control unit, it is possible to set time-accurate, automatically running movements of the gate.

The date and time are kept up to date for several weeks even when the controller is de-energized. There is an automatic summer time changeover according to the rules of the EU member states. Then, on the last Sunday in March at 2:00 a.m., the time is set forward by one hour and on the last Sunday in October at 3:00 a.m., the time is set back by one hour.

6.22.1 Show date / time

The current date and time are shown in the display for 20 seconds by simply pressing the rotary encoder. In the menu, the display can be reached as follows:

- Menu: „Clock / Calendar“, activate „Display Clock“

6.22.2 Set clock

The internal clock of the controller is set ex works. Should this time nevertheless deviate from the real, local time, the clock can be set as follows:

- Menu: „Clock / Calendar“, „Set Date/Time“, „Year“ set the last two digits of the current year
- Menu: „Clock / Calendar“, „Set Date/Time“, „Month“ set the current month
- Menu: „Clock / Calendar“, „Set Date/Time“, „Day“ set the current day
- Menu: „Clock / Calendar“, „Set Date/Time “, „Hour“ set the current hour
- Menu: „Clock / Calendar“, „Set Date/Time“, „Minute“ set the current minute
- Menu: „Clock / Calendar“, „Set Date/Time “, „Second“ set the current second
- Menu: „Clock / Calendar“, „Set Date/Time“, „Daylight Saving“ set to „1“ if an automatic daylight saving time changeover according to EU rules is desired.
- Menu: „Clock / Calendar“, „Set Date/Time“, „Now DaylightSav??“ set to „0“ in winter; set to „1“ for current summer time
- Check time and date with „Display Clock‘‘

6.23 Calendar functions of the control

In the automatic mode, the calendar functions enable the controller to influence the behavior of the gate differently at certain times.

A number of commands are available for gate actions that can be called up specifically at precisely defined times. The times and commands can be repeated for the seven days of the week in a weekly rhythm.

However, by means of an annual calendar with higher execution priority (e.g. for holidays or vacations), it is also possible to overlay this weekly recurring time sequence with other time and command combinations. The behavior of the gate can thus be individually predefined automatically with the entries in the calendar.

Information:
The calendar function in the controller must be enabled once by the technician in the „Service menu“ and is then available to the customer. Otherwise, the calendars are not visible.

- Menu: „Service Menu“, „Password Input“: Enter password.
- Menu: „Service Menu“, „CalendarChoice“: set to „0“, „1“ or „2“.
  - With the value 0 the calendar displays and functions are disabled (default).
  - The value 1 leads to the visibility and execution of the weekly calendar in the „Clock / Calendar“ menu.
  - The value 2 leads to the visibility and execution of the weekly and the yearly calendar in the menu „Clock / Calendar“.

Possible functions of the calendar (actions that the controller can perform via calendar)

Function	ID-Nr.	Aktion
No action	60	No action of the gate (placeholder)
Hold OPEN	61	Stop the gate statically in the OPEN position (It is not possible to close the gate).
Leave Open Pos.	62	Exit the static OPEN position of the gate (gate can close again).
Auto.Closing OFF	65	Deactivating the automatic feed function (hold-open time is ignored)
Auto.Zulauf EIN	66	Activating the automatic feed function (reactivating the hold-open time)
Hold Part.OPEN	63	Activate the hold function for the partial OPEN position (gate only moves between partial OPEN and OPEN position).
Leave Part.OPEN	64	Deactivating the partial OPEN hold function (gate can close completely again)
Gate OPEN	67	Gate moves to OPEN position
Gate CLOSE	68	Gate moves to CLOSED position (if possible)
Gate Part.OPEN	69	Gate moves to the partOPEN position (if possible)

6.23.1 Calendar activation

the entire calendar functions can be activated or deactivated at any time, by the following input,

without the need to change the individual entries.

- Menu: „Clock / Calendar“, „Cal.Activation, 0 = all calendar functions switched off
  1 = Calendar enabled

6.23.2 Display of the weekly calendar

In the weekly calendar, up to 20 different switching times and associated functions (gate actions) can be entered for each individual day of the week (Sunday to Saturday).
In the display mode of the weekly calendar, only the entered dates are displayed, while the empty memory locations are skipped. The weekly calendar display is called up as follows:

- Menu: „Clock/Calendar“, select „Disp.Week Cal.“.

Switching date → Sunday 12:30 ← Switching time
Auto.inlet On ← Function (action of the gate)

- By turning the selection knob you can scroll through all entries of the calendar
- The end of all entered actions is displayed with „Disp.Week Cal. END“
- The end of all entered actions is displayed with „Weekly calendar END „By briefly pressing the button, this weekly calendar display is exited again.

6.23.3 Insert and modify entries in the weekly calendar

In den Wochenkalender können wie folgt neue Einträge eingefügt, oder bestehende Einträge geändert werden:

- Menu: „Clock / Calendar“, „Edit Week Cal.“, „Set Weekdays.“ activate / An unoccupied memory location of a weekday (here Sunday) is displayed like this:

Sunday

- Turning the rotary knob clockwise selects the day of the week for the input:

Monday

- Pressing the rotary knob leads to the input mode for the hours:

Monday	**00:**

- Turning the rotary knob clockwise selects the hour of the switching time

Montag	**12:**

- Pressing the rotary knob leads to the input mode for the minutes:

Monday	12:**00**

- Turning the rotary knob clockwise selects the minute of the switching time:

Monday	12:**30**

- Pressing the rotary knob leads to the input mode for the function of the control at this switching time:

Monday	12:30
No action	

- Turn the rotary knob clockwise selects the function:

Monday	12:30
Hold Part.OPEN	

- Pressing the rotary knob inserts the complete entry sorted by time into the weekday of the calendar.

Monday

After that the next (free) memory location of the calendar is displayed :

- Turning the rotary knob clockwise quickly switches to the end of the weekly calendar:

Set Weekdays
END

Press the rotary knob at this point to exit the input and change function of the weekday calendar.

6.23.4 Copy day in weekly calendar

In the weekly calendar, all entries of a weekday can be copied to another weekday. The prerequisite for this, however, is that no entries exist yet in the weekday to which the data is to be copied.

In the menu: „Clock / Calendar“, „Edit Week Cal“, activate the item „Set Weekdays“.

- Select the target day to which the entries are to be copied:

Tuesday

- Pressing the rotary knob leads to the input mode for the hours:

Tuesday	**00:**

- Turn the knob several steps to the left, counterclockwise selects the day from which the entries are to be copied.

```
Tuesday        Copy
from: Monday
```

- Press rotary knob copies the entries (here: from Monday to Tuesday):

```
Tuesday
          Ready
```

6.23.5 Delete single entry

In the weekly calendar, individual entries of a weekday can be deleted as follows:

In the menu: „Clock / Calendar“, „Edit Week Cal. “, activate the item „Set Weekdays“.

- Select the entry to be deleted:

```
Monday          12:30
No action
```

- Turn the knob several steps to the left, turn counterclockwise brings the prompt:

```
Monday
 Delete Record?
```

- Pressing the rotary knob then deletes this entry from the day of the week of the calendar:

```
Monday
          Done
```

6.23.6 Delete weekday

In the weekly calendar, all entries of a weekday can also be deleted. The prerequisite for this is that the first entry of this weekday is selected:

Menu: „Clock / Calendar“, „Edit Week Cal.“, „Set Weekdays“ activate.

- Select the first entry of the day of the week to be deleted:

```
Monday          08:00
Hold OPEN
```

- Turn knob several steps to the left, counterclockwise brings the prompt:

```
Monday
 Delete Day?
```

- Pressing the rotary knob then deletes all entries for this day of the week in the calendar:

```
Monday
          Done
```

6.23.7 Delete the entire weekly calendar

All entries in the entire weekly calendar can also be deleted completely with:

- Menu: „Clock / Calendar“, „Edit Week Cal.“, „Delete Week“activate

```
Delete Week
          Done
```

6.23.8 Display of the annual calendar

Superordinate to the weekly calendar, there is an annual calendar in the control system that can store 20 different switching times and associated gate actions for a total of 40 days. If switching times are entered here in the annual calendar for a specific date, only these entries are given priority on that day and the weekly calendar for that day is ignored.

In the display mode of the annual calendar, only the entered appointments are displayed. The empty memory locations are skipped. The display of the annual calendar is called up as follows:

- Menu: „Clock / Calendar“, select „Disp.Year Cal.“

Switching date → 2021.09.30 12:30 ← Switching time
No Action ← Function (action of the gate)

- By turning the selection knob you can scroll through all entries of the calendar
- The end of all entered actions is displayed with „Disp.Year Cal. End“
- By pressing the button briefly, this annual calendar display is exited again

Information:
The „No action“ function can be used to specifically prevent other scheduled actions of the gate from the weekday calendar for a single day of the year (e.g. public holiday).

6.23.9 Insert and modify entries in the annual calendar

New entries can be added to the annual calendar or existing entries can be changed as follows:

- An empty memory location for a current date is displayed like this displayed: 20
- Pressing the rotary knob leads to the input mode for the year: 20**20.**
- Turn the knob clockwise to select the year: 20**22.**
- Pressing the rotary knob leads to the input mode for the month: 2022.**01.**
- Turn the knob clockwise to select the month: 2022.**06.**
- Pressing the rotary knob leads to the input mode for the day 2022.06.**01**

- Turn knob clockwise selects the day:

2022.06.**17**

- Pressing the rotary knob leads to the input mode for the hours:

2022.06.17 **00:**

- Turning the rotary knob clockwise selects the hour of the switching time:

2022.06.17 **12:**

- Pressing the rotary knob leads to the input mode for the minutes:

2022.06.17 12:**00**

- Turning the rotary knob clockwise selects the minute of the switching time:

2022.06.17 12:**30**

- Pressing the rotary knob leads to the input mode for the function of the control at this switching time:

2022.06.17 12:30
No function

- Turn the rotary knob clockwise selects the function

2022.06.17 12:30
TMR KeepPartOpen

- By pressing the rotary knob, the complete entry is sorted into the annual calendar / The next memory of the calendar is displayed:

2022.06.17

- Turning the knob clockwise quickly to the right switches to the end of the year calendar:

Cal. Weekday
END

Press the rotary knob at this point to exit the input and change function of the annual calendar.

Information:
Changes to the date (and not just the switching time) can only be made in the first entry for this date and always apply to all entries for this tag. The annual calendar is sorted, i.e. an older date comes before a younger date.

6.23.10 Copy day in annual calendar

In the annual calendar all entries of a certain day can be copied to a day with a different date. However, the prerequisite for this is the entry of a new date.

In the menu: „Clock / Calendar“, „Edit year“, activate the item „Set day“.

2023.12.**24**

- Enter a new date (as described above):

- Pressing the rotary knob leads to the input mode for the hours:

2023.12.24 **00:**

- Rotation knob several steps to the left, counterclockwise turning to selects the day, from which the entries are to be copied:

```
2023.12.24        copy
from:  2020.06.17
```

- Press rotary knob copies the entries (here from June 17, 2020 to December 24, 2023):

```
Done
```

6.23.11 Delete single entry

In the annual calendar, individual entries of a specific tag can be deleted as follows:

In the menu: „Clock / Calendar“, „Edit year“, activate the item „Set day“.

- Select the entry to be deleted:

```
2020.06.17        14:30
No function
```

- Rotary knob several steps to the left, counterclockwise turn then brings the prompt:

```
2020.06.17
Delete Record?
```

- Pressing the rotary knob then deletes this entry from the annual calendar:

```
Done
```

6.23.12 Delet Day

In the annual calendar, all entries of a single day can also be deleted. The prerequisite for this is that the first entry of this day is selected:

In the menu: „Clock / Calendar“, „Edit year“, activate the item „Set day“.

- Select the first entry of the tag to be deleted:

```
2021.06.17        07:30
Hold OPEN
```

- otary knob several steps to the left, counterclockwise turn then brings the prompt:

```
2021.06.17
Delete Record?
```

- Pressing the rotary knob then deletes this entry from the annual calendar:

```
Done
```

6.23.13 Delete the entire year calendar

All entries in the entire annual calendar can also be deleted completely with:

- In the menu: „Clock / Calendar“, „Edit year“, activate the item Activate „Del. Year Cal.“:

```
Del. Year Cal.
Done
```

6.24 Diagnosis support

The DRICO slife has a diagnostics menu that facilitates the commissioning of the control and the elimination of errors that have occurred.

6.24.1 Version display

The version of the controller can be displayed as follows:

- Menu: „Identification“, „Master Version“: The displayed letter and number combination uniquely identifies the software in use.
- Menu: „Identification“, „Gate Type“: The displayed text shows the name of the gate for which the control, the software and the stored parameters are defined.
- Menu: „Identification“, „Serialnumber“: The serial number of the controller is displayed.

After entering the correct password, the following version parameters are still visible:

- Version of the motor controller firmware.
- Version of the peripheral controller firmware.
- Version of the loaded parameters table data.
- Version of the bootloader software from the motor controller.
- Version of the bootloader software from the peripheral controller.

6.24.2 Gate status display

In the Gate status menu, all information is summarized that represents the current status of the control system in connection with the gate.

The menu is reached via „Diagnosis“, „Gate Type“ and has the following sub-items for information:

Display	Meaning
Gate state HOLD	The current state of the gate detected by the software is displayed. (OPEN / CLOSE / PARTIALLY OPEN / STOP)
Input: 87654321 value: 00100010	The logical signal levels at the input terminals of the control are displayed. The sequence corresponds to the inputs In8 to In1. An input with signal level high is displayed with „1“. In the example, the input In2 and In6 is at +24 V potential.
Output: 54321 calue: 00100	The status of the output relays is displayed with its logical values. An energized relay is marked with „1“. The sequence corresponds to the outputs Rel5 to Rel1. In the example, relay Rel3 is active.
Number of Travels 5217 / 19	The total number of travels and the number of travels since the last maintenance are displayed.
Last maintenance 7 month	The number of months that have passed since the last maintenance is displayed here.

To ensure regular maintenance of the gate, a maintenance interval can be defined according to elapsed time or according to the number of gate movements performed. When one of these events is reached, the message „< Maintenance > required“ is then shown in the display.
With the last menu item from this gate status menu, such a maintenance request can be reset (see Chapter: 6.19.5).

6.24.3 Sensors status

Via „Diagnosis“, „Sensor State“ the display of the status of the sensors is visible. The structure of the menu is identical to the display in the operating state, as shown in section „5.2.2 Sensor display“.

6.24.4 Temperature on the CPU board

It is possible to display the current temperature, the lowest occurred temperature and the highest occurred temperature on the control board. The display for this can be reached as follows:

- Menu: „Service Menu“, „Password Entry“: Enter password.
- Menu: „Diagnosis“, „Measured Temp.“, „CPU Temperature“ displays the temperatures that have occurred in the clock module on the control board. The current, as well as the minimum and the maximum temperature since the last reset are displayed.
- Menu: „Diagnosis“, „Measured Temp.“, activate „RESET Min/Max.“, sets the minimum and maximum value of the respective displays to the current temperature.

6.24.5 Power electronics temperature

The current temperature, the minimum occurred temperature and the maximum occurred temperature of the power electronics can be displayed via the diagnostics menu. The display for this can be reached as follows:

- Menu: „Service Menu“, „Password input“: Enter password
- Menu: „Diagnosis“, „Measured Temp.“, „FC Temperature“ displays the temperatures that have occurred in the FU power component of the controller. The current, minimum and maximum temperatures since the last reset are displayed.
- Menu: „Diagnosis“, „Measured Temp.“, activate „RESET Min/Max.“, sets the minimum and maximum value of the respective displays to the current temperature.

6.24.6 Log system

The system logbook is a ring memory with up to 254 entries. Here, relevant events of the control software are permanently stored in the memory with their reference number and time stamp and are still available after restart or power failure. The time entered refers to the elapsed number of hours since the control was first put into operation. Using this log, the last actions of the gate and any errors that may have occurred can be traced.

The first line of the display shows the time of the entry. The second line starts with a number of up to three digits, which corresponds to a reference number from the parameter table. This is followed by an associated text, which is also stored in the parameter table. By turning the selection switch, it is possible to scroll through the chronologically sorted entries in this log memory. The very first entry in this log is always the reference to the program initialization ([250] ProgramInit.). The specific deletion of this data is not intended. Only the initialization of the entire parameter memory restarts this system log.

The system logbook is displayed as follows:

- Menu: „Service Menu“, „Password input“: Enter password
- Menu: „Diagnosis“, „Activate system logbook

Display	Meaning
Start of System-Log-book	By turning the selector to the left, the beginning of the log system memory is reached
0 => 250 ProgrammInit	Program initialization (First entry in memory)
...	
HHH => 253 RESET	Log entry due to a reset of the controller (e.g. after exiting the menu).
...	
End of System-Log-book	End of log system memory reached

6.25 Parameter reference / error numbers

The possible entries of events and / or occurred errors in the log system described before are listed in the following table:

Reference / Error No.	Text	Meaning
25	StatEdgeOPEN	Fixed safety contact edges OPEN was activated (a '0' is stored directly after the text if the motor was not active)
26	StatEdgCLOSE	Fixed safety contact edges CLOSED was activated (a ‚0' is stored directly after the text if the motor was not active)
27	Mov.EdgeOPEN	Riding safety contact edges OPEN was activated (a ‚0' is stored directly after the text if the motor was not active)
28	MovEdgeCLOSE	Moving safety contact edges CLOSED were activated (a '0' is stored directly after the text if the motor was not active)
40	Lightbarrier	The light barrier was activated during CLOSE travel
86	No.ofReversions	The maximum number of reversals for one direction of travel (without reaching the end position) has been reached
130	SKL OPtstErr	Faulty test result of the fixed safety contact edges OPEN was detected
131	SKL CLtstErr	Faulty test result of the fixed safety contact edges CLOSED was detected
143	Auto.Closing OFF -------?	After restarting the program, the gate is in the OPEN position and awaits the activation of the closing timer.
161	Stop Immediately	The stop function has been activated for longer than 2 seconds (STOP input, or hold to run OPEN and CLOSE active simultaneously). Is only entered in the system log when activated during the motor run.
171	OPEN	The OPEN limit switch was activated during OPEN travel and deactivated again before the motor came to a standstill
172	CLOSE	The CLOSE limit switch was activated during CLOSE travel and deactivated again before the motor came to a standstill
197	BEGIN	Restart the program
201	ROM Error	The motor controller has detected a program memory error (severe exception error)
202	EEPROM Bcc	An error occurred while accessing the EEPROM (can occur sporadically directly after a reset, e.g. if menu was not terminated correctly)
203	StackReg.Err	The motor controller has detected a stack error (severe exception error)
204	StackErr:low	The motor controller has detected a stack error (severe exception error)
205	StackErr:high	The motor controller has detected a stack error (severe exception error)
206	WdgErr:low	The motor controller has detected an error of the watchdog (severe exception error)
207	WdgErr:high	The motor controller has detected an error of the watchdog (severe exception error)
208	Watchdog Err	The motor controller has detected an error of the watchdog (severe exception error)
209	WDG Reset	The motor controller was restarted by the watchdog
210	MotRunt.Err	The motor has been stopped because the maximum motor running time for this gate movement has been reached (limit switch has not been reached in the maximum running time) [Gate check required].
211	main-cntErr	The main loop counter of the motor controller has overflowed (severe exception error)
212	Undef.State	The variable of the state machine has reached an invalid value (severe exception error)
213	LimitTimeErr.	The limit switch was not left within the maximum permissible time (4 sec.) (gate disengaged or very sluggish) [Gate check required].
214	< MAINTENANCE > required	One of the specified maintenance events (gate cycles, maintenance period) has occurred
215	Limits undef.	The end positions of the gate are undefined for the control software (e.g. both limit switch contacts open)
217	EEPR.Err.Txt	The searched display text was not found in the memory
218	EEPR.Err.Wr.	An error occurred while writing a text to memory
219	EEPR.Err.Lang	An error occurred with a pointer address for a text in memory
220	MotorERR.	The motor was stopped due to a motor monitoring signal (return signals not plausible)

Referenz- / Fehler Nr.	Text	Bedeutung
224	FC Err.Volt.	The supply voltage at the FU power module is too low (e.g. current switched off; DC link voltage weak)
225	FC Err.Fault	The power module detects a short circuit to the motor
226	FC Err.Temp:	The power module detects an operating temperature that is too high
228	REL+ErrHigh	The voltage monitoring for the enable signal has measured a value that is too high
229	REL+ Low	The voltage monitoring for the enable signal has measured a value that is too small
230	REL+ErrIdle	The voltage monitoring for the enable signal has measured too high a value for the open-circuit voltage
234	INC-Sensor OP	Incremental encoder values in OPEN direction too small
235	INC-Sensor CL	Incremental encoder values in CLOSE direction too small
236	Reference Active	A reference run of the gate was activated
238	OP/CL-StartActiv	The program start of the motor controller was interrupted because of an active move command (check inputs)
239	LBtestError	The test of the light barrier has revealed an error
240	EMGYtestError	The self-test at the emergency input has failed negatively
241	SPI BCC Err	Checksum error occurred during communication between controllers
242	SPI ID Val	Data error has been detected during communication between the controllers
243	ParameterErr	A data error was detected during communication between the controllers
244	EMG-STPtstErr	The self-test at the EMERGENCY STOP input has failed negatively.
247	Variant Err	The loaded parameter set and the program variant of the motor controller do not match
248	Par.LoadingErr	An error has been detected during the transfer of the parameter set from the peripheral controller to the motor controller (CRC16 checksum)
249	Menupointer Err	Menu program pointer error (error in the branching of the menu structure)
250	ProgramInit.	In the system log: The program was initialized (clearing and initializing the parameter memory)
251	EMERGENCYact.	The special emergency operating mode has been activated
253	RESET	Triggering a software restart by the program

7 Maintenance and servicing of the control system

The DS FU62 control unit itself is maintenance-free.

However, the entire gate system must be checked regularly according to DIN EN 12453. As a reminder of this necessary maintenance, the operator of the gate system is informed by the software of the control unit with the message

< MAINTENANCE >
required

in the display.

8 Decommissioning and disposal

The products manufactured by ASO GmbH are intended exclusively for commercial use (B2B).

At the end of use, the products must be disposed of in accordance with all local, regional and national regulations.
ASO will also gladly take back the products and dispose of them properly.

The control is equipped with a battery type CR 2032.

According to the German battery law, every consumer is legally obliged to return all used batteries. Disposal in the household waste is prohibited. Old batteries and rechargeable batteries can be returned free of charge to the public collection points of the municipality and wherever batteries and rechargeable batteries are sold. You can also return batteries purchased from us after use. In doing so, you are making a significant contribution to environmental protection!

9 Technical data

Electrical values	**slife 150**	**slife 270**
Power supply	1 Phase 230 V ***AC*** / N / PE 50 / 60 Hz	
Fuse protection on site	max. 10 A	max. 16 A
Power consumption (without motor and external consumers)	16 W	
External supply for external 230 V devices	230 V ***AC*** ±10% 50 / 60 Hz fused on printed circuit board 6.3 A slow blow	
External supply for external 24 V devices	24 V ***DC*** (±10 %) max. 500 mA (fused with self-resetting semiconductor fuse)	
Control inputs	24 V ***DC*** / typical 4 mA < 12 V: inactive -> logical 0 > 18 V: activ -> logical 1 (internally galvanically isolated)	
Relay outputs [1]	max. 250 V ***AC*** / 1 A bzw. 250 W	
Maximum el. motor power	0,75 kW	2,7 kW
Frequency output on the motor	7 Hz up to max. 75 Hz	
Maximum mechanical power at the motor shaft	ca. 0,55 kW	ca. 2,2 kW
Mechanical values		
Housing material	ABS plastic	
Dimensions W x H x D	160 x 270 x 110 mm	160 x 270 x 130 mm
Weight	2,3 kg	3 kg
Protection class	IP54	
Temperature range	-20 °C to +55 °C	
Humidity range	max. 99 % non condensing	

[1] If inductive loads are switched (e.g. further relays or brakes), these must be equipped with a free-wheeling diode as an interference suppression measure.

EG Konformitätserklärungen

EG - Konformitätserklärung
EC Declaration of conformity
Déclaration de conformité CE

Hiermit erklären wir, dass die nachfolgend bezeichneten Produkte der Baureihe

DRICO slife 150 FU

Steuerung für kraftbetätigte Schiebe-, Roll- oder Sektionaltore

aufgrund ihrer Konzipierung und Bauart sowie in der von uns in Verkehr gebrachten Ausführung, den einschlägigen grundlegenden Sicherheits- und Gesundheitsanforderungen der nachfolgenden EG-Richtlinien und Normen entspricht:

2006/42/EG
2014/35/EU
2014/53/EU
EN ISO 13849-1:2008
EN 12445:2000
EN 12453:2000 (5.2)
EN 60335-1:2002
+A11:2004+A12:2006+A2:2006
+A13:2008+A14:2010
EN 300 220-2 V3.1.1:2017
EN 301 489-3 V2.1.1:2017

Alle technischen Daten für diese Produkte werden sicher aufbewahrt und werden erforderlichenfalls der behördlichen Marktaufsicht auf Anfrage zur Verfügung gestellt.

Diese Konformitätserklärung entbindet den Konstrukteur/ Hersteller der Maschine nicht von seiner Pflicht, die Konformität der gesamten Maschine, an der dieses Produkt angebracht wird, entsprechend der EG-Maschinen-richtlinie sicherzustellen.

Hersteller und Dokumentationsbevollmächtigter

We hereby declare that the following products of the model range

DRICO slife 150 FU

Controller for power operated sliding gates, rolling doors or sectional doors

satisfies the relevant essential health and safety requirements of the EC directives and standards listed below on account of its design and construction, as does the version brought to market by us:

2006/42/EG
2014/35/EU
2014/53/EU
EN ISO 13849-1:2008
EN 12445:2000
EN 12453:2000 (5.2)
EN 60335-1:2002
+A11:2004+A12:2006+A2:2006
+A13:2008+A14:2010
EN 300 220-2 V3.1.1:2017
EN 301 489-3 V2.1.1:2017

All technical data for these products are securely stored and, if necessary, made available to regulatory market surveillance upon request.

This declaration of conformity does not relieve the designer / manufacturer of the machine from his obligation to ensure that the conformity of the entire machine to which this product is attached satisfies the corresponding EC directive.

Manufacturer and attorney of documents

Par la présente nous déclarons que les produits suivants de la série

DRICO slife 150 FU

Commande pour portes coulissantes, portes roulantes ou portes sectionnelles motorisées

de par sa conception et sa construction, ainsi que dans les modèles mis en circulation par nos soins, répondent aux exigences de base pour la sécurité et la santé des directives et normes CE suivantes:

2006/42/EG
2014/35/EU
2014/53/EU
EN ISO 13849-1:2008
EN 12445:2000
EN 12453:2000 (5.2)
EN 60335-1:2002
+A11:2004+A12:2006+A2:2006
+A13:2008+A14:2010
EN 300 220-2 V3.1.1:2017
EN 301 489-3 V2.1.1:2017

Toutes les données techniques relatives à ces produits seront conservées en toute sécurité et, seront mises, sur demande, à la disposition des autorités de réglementation.

Cette déclaration de conformité ne délie pas le constructeur / fabricant de la machine de son obligation d'assurer la conformité de l'ensemble de la machine à laquelle ce produit est apposé selon la directive CE.

Fabricant et agent de documentation

ASO GmbH
Hansastr. 52
D-59557 Lippstadt
Lippstadt, 17.05.2018

H. Friedrich
- Geschäftsführer - CEO - Gérant -

DIN EN ISO 9001 Stand: 17.05.2018 Rev.:01 Seite 1 von 1

EG - Konformitätserklärung
EC Declaration of conformity
Déclaration de conformité CE

ASO Safety Solutions

Hiermit erklären wir, dass die nachfolgend bezeichneten Produkte der Baureihe

DRICO slife 270 FU

Steuerung für kraftbetätigte Schiebe-, Roll- oder Sektionaltore

aufgrund ihrer Konzipierung und Bauart sowie in der von uns in Verkehr gebrachten Ausführung, den einschlägigen grundlegenden Sicherheits- und Gesundheitsanforderungen der nachfolgenden EG-Richtlinien und Normen entspricht:

2006/42/EG
2014/35/EU
2014/53/EU
EN ISO 13849-1:2008
EN 12445:2000
EN 12453:2000 (5.2)
EN 60335-1:2002
+A11:2004+A12:2006+A2:2006
+A13:2008+A14:2010
EN 300 220-2 V3.1.1:2017
EN 301 489-3 V2.1.1:2017

Alle technischen Daten für diese Produkte werden sicher aufbewahrt und werden erforderlichenfalls der behördlichen Marktaufsicht auf Anfrage zur Verfügung gestellt.

Diese Konformitätserklärung entbindet den Konstrukteur/ Hersteller der Maschine nicht von seiner Pflicht, die Konformität der gesamten Maschine, an der dieses Produkt angebracht wird, entsprechend der EG-Maschinen-richtlinie sicherzustellen.

We hereby declare that the following products of the model range

DRICO slife 270 FU

Controller for power operated sliding gates, rolling doors or sectional doors

satisfies the relevant essential health and safety requirements of the EC directives and standards listed below on account of its design and construction, as does the version brought to market by us:

2006/42/EG
2014/35/EU
2014/53/EU
EN ISO 13849-1:2008
EN 12445:2000
EN 12453:2000 (5.2)
EN 60335-1:2002
+A11:2004+A12:2006+A2:2006
+A13:2008+A14:2010
EN 300 220-2 V3.1.1:2017
EN 301 489-3 V2.1.1:2017

All technical data for these products are securely stored and, if necessary, made available to regulatory market surveillance upon request.

This declaration of conformity does not relieve the designer / manufacturer of the machine from his obligation to ensure that the conformity of the entire machine to which this product is attached satisfies the corresponding EC directive.

Par la présente nous déclarons que les produits suivants de la série

DRICO slife 270 FU

Commande pour portes coulissantes, portes roulantes ou portes sectionnelles motorisées

de par sa conception et sa construction, ainsi que dans les modèles mis en circulation par nos soins, répondent aux exigences de base pour la sécurité et la santé des directives et normes CE suivantes:

2006/42/EG
2014/35/EU
2014/53/EU
EN ISO 13849-1:2008
EN 12445:2000
EN 12453:2000 (5.2)
EN 60335-1:2002
+A11:2004+A12:2006+A2:2006
+A13:2008+A14:2010
EN 300 220-2 V3.1.1:2017
EN 301 489-3 V2.1.1:2017

Toutes les données techniques relatives à ces produits seront conservées en toute sécurité et, seront mises, sur demande, à la disposition des autorités de réglementation.

Cette déclaration de conformité ne délie pas le constructeur / fabricant de la machine de son obligation d'assurer la conformité de l'ensemble de la machine à laquelle ce produit est apposé selon la directive CE.

Hersteller und Dokumentationsbevollmächtigter

Manufacturer and attorney of documents

Fabricant et agent de documentation

ASO GmbH
Hansastr. 52
D-59557 Lippstadt
Lippstadt, 17.05.2018

H. Friedrich
- Geschäftsführer - CEO - Gérant -

CE

DRICO® slife

ENGLISH

DOC0000321 Operating instructions Rev 06
Subject to technical changes.
No liability can be accepted for errors and misprints.

ASO Safety Solutions

ASO GmbH Antriebs- und Steuerungstechnik
Hansastraße 52 ▪ 59557 Lippstadt ▪ GERMANY
T: +49 2941 9793-0 ▪ F: +49 2941 9793 299
www.asosafety.de ▪ E-Mail: aso-eu@asosafety.com